POWER-TECH SISTEMA
Cascade installation

1. 1. GENERAL FEATURES

The High Power heating units series is available in the following three outputs 50 and 100 kW, with ø 28 mm stainless steel heat exchanger, to satisfy the power increase requests in an extremely limited space. Boilers are designed to suit individual or cascade installations, one independent of each other.

The A1K 50 model is a boiler equipped with one heat exchanger, while the A1K 100 model is boiler equipped with two Combi-Tech® heat exchangers made by a ø 28 mm stainless steel spiral single pipe, fitted in a single casing. This boiler, in addition to a size advantage, 70 cm wide, also offers advantages in terms of power. It can be set up as 100 kW (50 + 50 kW), by offering a great flexibility for the installation of high power cascade systems. It also offers advantages in terms of performances such as a 1:20 (100 kW) modulation, the possibility of excluding one boiler and, in case of one boiler failure, the ability to never leave the system shut down with the other boiler functioning.

Aleabrax provides a wide range of heat outputs, from 50 to 500 kW already configured. For outputs higher than 500 kW, please contact our technical department.

The composition of the cascade system provides for the free combination of the individual boilers connected by means of hydraulic manifolds for the gas, flow and return connections.

The system also provides for the possibility of:

- Supplying a remote storage cylinder (RS version) by means of a 3-way valve.
- A back-to-back installation (ScS version), by fitting the boilers in opposite position, to facilitate the installation when the linear system is not suitable due to space problems.

2. 2. PRODUCTS TYPE

GENERAL INDICATIONS

The use of the SISTEMA series with cascade installation is able to offer the ideal output solution according to the different needs.

Boilers are in fact designed to suit cascade installations, up to a maximum of 8 boilers for a total output of 800 kW allowing a continuous output modulation.

Versions identified with 'RS' are designed for a remote storage cylinder connection.

Attention: For outputs higher than 500 kW and solutions with the installation of back-to-back generators, please contact our technical department.

POSSIBLE CONFIGURATIONS

boiler MODEL		A1K 50	A1K 100	Heat Output [kW]		
				HEATING		D.H.W.
SISTEMA				Min.	Max.	Max.
SISTEMA 150		1	1	5	150	-
SISTEMA 150 RS		1	1	5	150	100
SISTEMA 200			2	5	200	-
SISTEMA 200 RS			2	5	200	100
SISTEMA 250		1	2	5	250	-
SISTEMA 250 RS		1	2	5	250	100
SISTEMA 300			3	5	300	-
SISTEMA 300 RS			3	5	300	100
SISTEMA 350		1	3	5	350	-
SISTEMA 350 RS		1	3	5	350	100
SISTEMA 400			4	5	400	-
SISTEMA 400 RS			4	5	400	100
SISTEMA 450		1	4	5	450	-
SISTEMA 450 RS		1	4	5	450	100
SISTEMA 500			5	5	500	-
SISTEMA 500 RS			5	5	500	100

3. TECHNICAL DATA

Model		150	200	250	300
Compositions		1x50+1x100	2x100	1x50+2x100	3x100
Heat Input max. (C.H.)	MJ/h	594	796	994	1888
Heat Input min. (C.H.)	MJ/h	20	20	20	20
Heat Output max. - 80/60°C	kW	147.56	196.74	245.93	295.11
Heat Output min. - 80/60°C	kW	4.83	4.83	4.83	4.83
Heat Output max. - 50/30°C	kW	160.20	213.60	267.00	320.40
Heat Output max at 30% Heat Input average - return 30°C	kW	8.98	17.14	8.98	17.14
Efficiency at 100% Heat Imput - 60/80°C	%	98.37	98.37	98.37	98.37
Heat Input average efficiency - 60/80°C	%	97.88	97.88	97.88	97.88
Efficiency Heat Output min. - 60/80°C	%	96.51	96.51	96.51	96.51
Efficiency at 100% Heat Input - 30/50°C	%	106.80	106.80	106.80	106.80
Efficiency Heat Output min. - 30/50°C	%	105.70	105.70	105.70	105.70
Efficiency at 30% Heat Input average - return 47°C	%	102.80	102.80	102.80	102.80
Efficiency at 30% Heat Input average - return 30°C	%	108.83	108.83	108.83	108.83
Combustion data					
Maximum combustion efficiency	%	97.90	97.90	97.90	97.90
Minimum combustion efficiency	%	98.0	98.0	98.0	98.0
Flue efficiency losses with burner on (Heat Input max.)	%	2.10	2.10	2.10	2.10
Flue efficiency losses with burner on (Heat Input min.)	%	2.0	2.0	2.0	2.0
Flue efficiency losses with burner off	%	0.02	0.02	0.02	0.02
Casing efficiency losses (Heat Input max.)	%	-0.47	-0.47	-0.47	-0.47
Casing efficiency losses (Heat Input min.)	%	1.49	1.49	1.49	1.49
Casing efficiency losses with burner off	%	0.03	0.03	0.03	0.03
Fumes temperature - Heat Input max.	°C	66.4	66.4	66.4	66.4
Fumes temperature - Heat Input min.	°C	56.8	56.8	56.8	56.8
Fumes mass - Heat Input max.	g/s	66.83	89.28	111.47	133.92
Fumes mass - Heat Input min.	g/s	2.28	2.28	2.28	2.28
CO2 Heat Input max. - G20	%	9.3-9.0	9.3-9.0	9.3-9.0	9.3-9.0
CO2 Heat Input min. - G20	%	9.0-8.8	9.0-8.8	9.0-8.8	9.0-8.8
CO2 Heat Input max. - G30	%	11.3-11.1	11.3-11.1	11.3-11.1	11.3-11.1
CO2 Heat Input min. - G30	%	10.9-10.7	10.9-10.7	10.9-10.7	10.9-10.7
CO2 Heat Input max. - G31	%	10.3-10.1	10.3-10.1	10.3-10.1	10.3-10.1
CO2 Heat Input min. - G31	%	9.8-9.6	9.8-9.6	9.8-9.6	9.8-9.6
CO Heat Input max	ppm	68	68	68	68
CO Heat Input max.	ppm	1	1	1	1
Weighted CO (0% O2)	ppm	9	9	9	9
NOx class	class	6	6	6	6
Weighted NOx (0% O2)	mg/kWh	51	51	51	51
Central heating circuit					
Temperature setting - Central heating	°C	30-80/25-45	30-80/25-45	30-80/25-45	30-80/25-45
Max. operating temperature - Central heating	°C	80	80	80	80
Max. operating pressure - Central heating	bar	3	3	3	3

Model		150	200	250	300
Min. operating pressure - Central heating	bar	0.3	0.3	0.3	0.3
Primary circuit water content	litres	40	51	65	76
Dimensions					
Width	mm	1321	1581	2128	2388
Depth	mm	524	524	524	524
Height	mm	1794	1794	1794	1794
Hydraulic Connections					
C.H. Flow	DN	65	65	65	65
Gas	DN	40	40	40	40
C.H. Return	DN	65	65	65	65
Condensate drain	Ø	40	40	40	40
Flue systems					
Fan - Max. available pressure	Pa	100 [1]	100 [1]	100 [1]	100 [1]
Fan - Min. available pressure	Pa	30 [1]	30 [1]	30 [1]	30 [1]
Max. Flue length Ø80 - Horiz. / Vertical single pipe	m	25 [2]	-	25 [2]	-
Max. Flue length Ø100 - Horiz. / Vertical single pipe	m	30 [3]	30 [3]	30 [3]	30 [3]
Electrical specifications					
Voltage-frequency	V/Hz	230/50	230/50	230/50	230/50
Max Power consumption	W	324	416	540	648
Max Power consumption - boiler pump (100%)	W	165	220	275	330
Electric power with boiler OFF	W	10.5	14	14	21
Protection rating	IP	X5D	X5D	X5D	X5D
Gas supply					
Nominal supply pressure - Natural Gas	kPa	1.13	1.13	1.13	1.13
Heating Max. fan speed - Natural Gas	Hz	247 [1]	247 [1]	247 [1]	247 [1]
Heating Min. fan speed - Natural Gas	Hz	53 [1]	53 [1]	53 [1]	53 [1]
Fuel consumption - Natural Gas	MJ/h	594	792	990	1188
Nominal Supply pressure - Universal LPG	kPa	2.75	2.75	2.75	2.75
Heating Max. fan speed - Natural Gas	Hz	240 [1]	240 [1]	240 [1]	240 [1]
Heating Min. fan speed - Natural Gas	Hz	53 [1]	53 [1]	53 [1]	53 [1]
Fuel consumption - Universal LPG	MJ/h	594	792	990	1188

[1] Single thermal unit

[2] Single A1K 50 unit

[3] Single A1K 100 unit

Model		350	400	450	500
Compositions		1x50+3x100	4x100	1x50+4x100	5x100
Heat Input max. (C.H.)	kW	1390	1592	1790	1988
Heat Input min. (C.H.)	kW	20	20	20	20
Heat Output max. - 80/60°C	kW	147.56	196.74	245.93	295.11
Heat Output min. - 80/60°C	kW	4.83	4.83	4.83	4.83
Heat Output max. - 50/30°C	kW	160.20	213.60	267.00	320.40
Heat Output max at 30% Heat Input average - return 30°C	kW	8.98	17.14	8.98	17.14
Efficiency at 100% Heat Imput - 60/80°C	%	98.37	98.37	98.37	98.37
Heat Input average efficiency - 60/80°C	%	97.88	97.88	97.88	97.88
Efficiency Heat Output min. - 60/80°C	%	96.51	96.51	96.51	96.51
Efficiency at 100% Heat Input - 30/50°C	%	106.80	106.80	106.80	106.80
Efficiency Heat Output min. - 30/50°C	%	105.70	105.70	105.70	105.70
Efficiency at 30% Heat Input average - return 47°C	%	102.80	102.80	102.80	102.80
Efficiency at 30% Heat Input average - return 30°C	%	108.83	108.83	108.83	108.83
Combustion data					
Maximum combustion efficiency	%	97.90	97.90	97.90	97.90
Minimum combustion efficiency	%	98.0	98.0	98.0	98.0
Flue efficiency losses with burner on (Heat Input max.)	%	2.10	2.10	2.10	2.10
Flue efficiency losses with burner on (Heat Input min.)	%	2.0	2.0	2.0	2.0
Flue efficiency losses with burner off	%	0.02	0.02	0.02	0.02
Casing efficiency losses (Heat Input max.)	%	-0.47	-0.47	-0.47	-0.47
Casing efficiency losses (Heat Input min.)	%	1.49	1.49	1.49	1.49
Casing efficiency losses with burner off	%	0.03	0.03	0.03	0.03
Fumes temperature - Heat Input max.	°C	66.4	66.4	66.4	66.4
Fumes temperature - Heat Input min.	°C	56.8	56.8	56.8	56.8
Fumes mass - Heat Input max.	g/s	156.11	178.56	200.75	222.94
Fumes mass - Heat Input min.	g/s	2.28	2.28	2.28	2.28
CO2 Heat Input max. - G20	%	9.3-9.0	9.3-9.0	9.3-9.0	9.3-9.0
CO2 Heat Input min. - G20	%	9.0-8.8	9.0-8.8	9.0-8.8	9.0-8.8
CO2 Heat Input max. - G30	%	11.3-11.1	11.3-11.1	11.3-11.1	11.3-11.1
CO2 Heat Input min. - G30	%	10.9-10.7	10.9-10.7	10.9-10.7	10.9-10.7
CO2 Heat Input max. - G31	%	10.3-10.1	10.3-10.1	10.3-10.1	10.3-10.1
CO2 Heat Input min. - G31	%	9.8-9.6	9.8-9.6	9.8-9.6	9.8-9.6
CO Heat Input max	ppm	68	68	68	68
CO Heat Input max.	ppm	1	1	1	1
Weighted CO (0% O2)	ppm	9	9	9	9
NOx class	class	6	6	6	6
Weighted NOx (0% O2)	mg/kWh	51	51	51	51
Central heating circuit					
Temperature setting - Central heating	°C	30-80/25-45	30-80/25-45	30-80/25-45	30-80/25-45
Max. operating temperature - Central heating	°C	80	80	80	80
Max. operating pressure - Central heating	bar	3	3	3	3
Min. operating pressure - Central heating	bar	0.3	0.3	0.3	0.3
Primary circuit water content	litres	76	134	155	168
Dimensions					
Width	mm	2935	3195	3742	4002

Model		350	400	450	500
Depth	mm	524	524	524	524
Height	mm	1794	1794	1794	1794
Hydraulic Connections					
C.H. Flow	DN	100	100	100	100
Gas	DN	40	40	40	40
C.H. Return	DN	100	100	100	100
Condensate drain	Ø	40	40	40	40
Flue systems					
Fan - Max. available pressure	Pa	100 [1]	100 [1]	100 [1]	100 [1]
Fan - Min. available pressure	Pa	30 [1]	30 [1]	30 [1]	30 [1]
Max. Flue length Ø80 - Horiz. / Vertical single pipe	m	25 [2]	-	25 [2]	-
Max. Flue length Ø100 - Horiz. / Vertical single pipe	m	30 [3]	30 [3]	30 [3]	30 [3]
Electrical specifications					
Voltage-frequency	V/Hz	230/50	230/50	230/50	230/50
Max Power consumption	W	756	864	972	1080
Max Power consumption - boiler pump (100%)	W	385	440	495	550
Electric power with boiler OFF	W	24.5	28	31.5	35
Protection rating	IP	X5D	X5D	X5D	X5D
Gas supply					
Nominal supply pressure - Natural Gas	kPa	1.13	1.13	1.13	1.13
Heating Max. fan speed - Natural Gas	Hz	247 [1]	247 [1]	247 [1]	247 [1]
Heating Min. fan speed - Natural Gas	Hz	53 [1]	53 [1]	53 [1]	53 [1]
Fuel consumption - Natural Gas	MJ/h	1386	1584	1782	1980
Nominal Supply pressure - Universal LPG	kPa	2.75	2.75	2.75	2.75
Heating Max. fan speed - Natural Gas	Hz	240 [1]	240 [1]	240 [1]	240 [1]
Heating Min. fan speed - Natural Gas	Hz	53 [1]	53 [1]	53 [1]	53 [1]
Fuel consumption - Universal LPG	MJ/h	1386	1584	1782	1980

[1] Single thermal unit

[2] Single A1K 50 unit

[3] Single A1K 100 unit

4. DIMENSIONS

SISTEMA 150 - 250

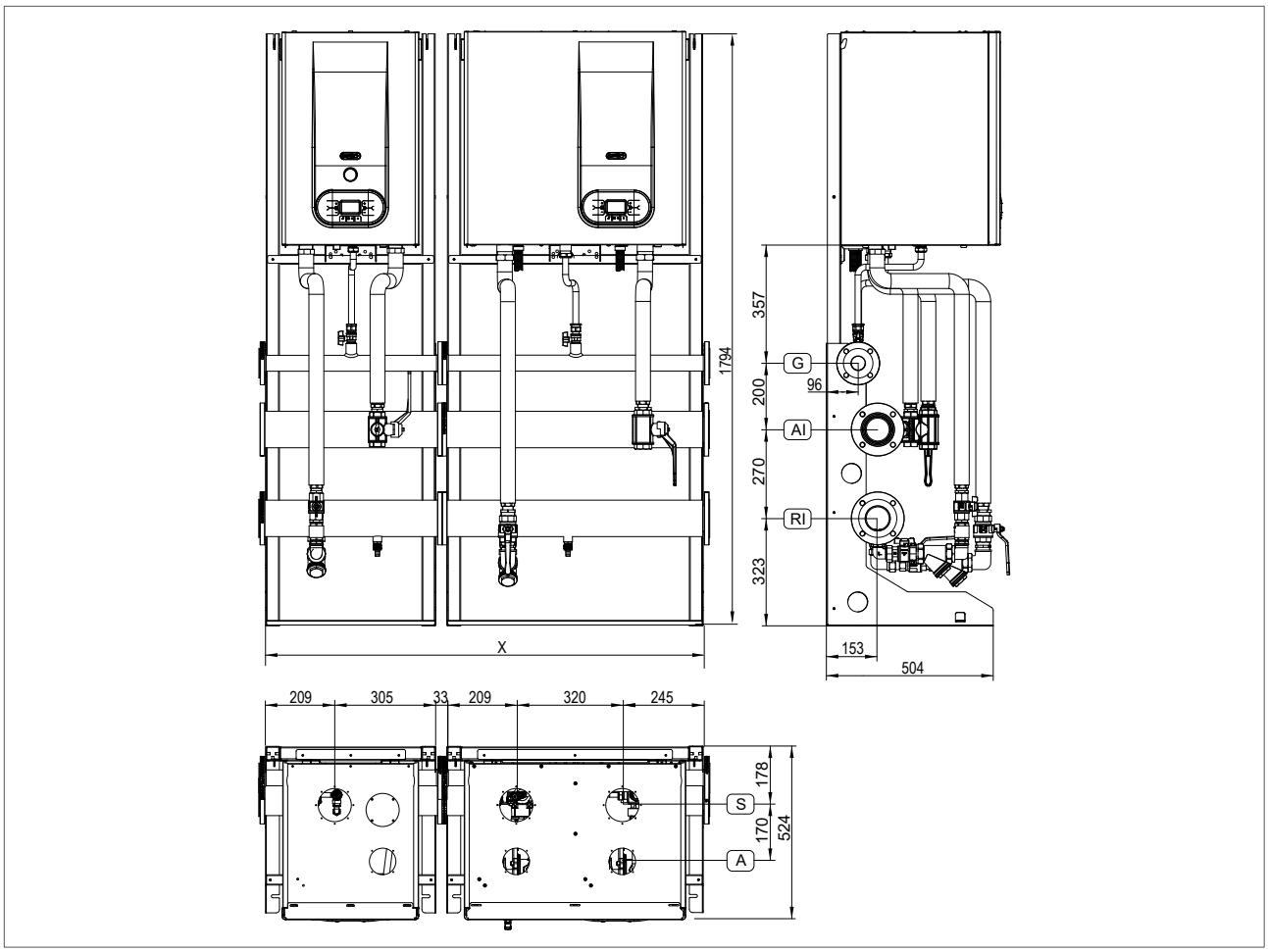

KEY

AI	C.H. FLOW	DN65-PN6
RI	C.H. RETURN	DN65-PN6
AB	C.H. FLOW CONNECTION TO DHW STORAGE TANK	Ø1"1/2
RB	C.H. RETURN CONNECTION FROM DHW STORAGE TANK	Ø1"
G	GAS	DN40-PN6
A	AIR INTAKE	Ø80
S	FLUE OUTLET	Ø80

SISTEMA models	compositions	X mm
150	1 X A1K 50 + 1 X A1K 100	1321
250	1 X A1K 50 + 2 X A1K 100	2128

RS VERSION FOR ADDITIONAL BOILER

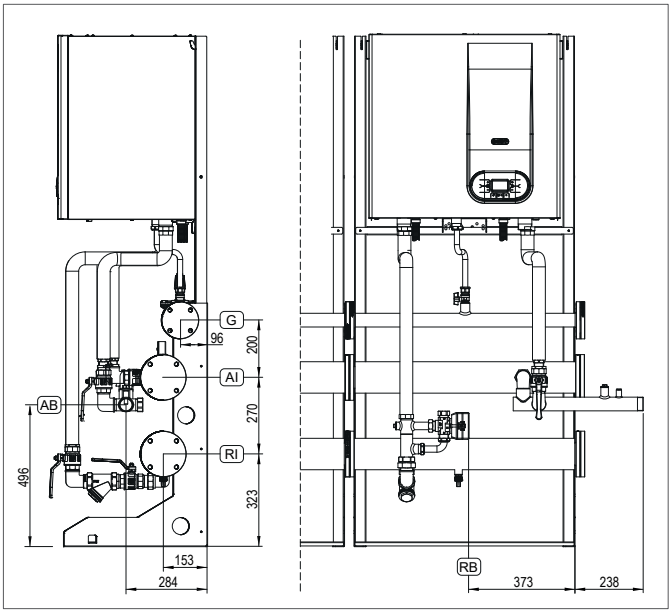

SISTEMA 200 - 300

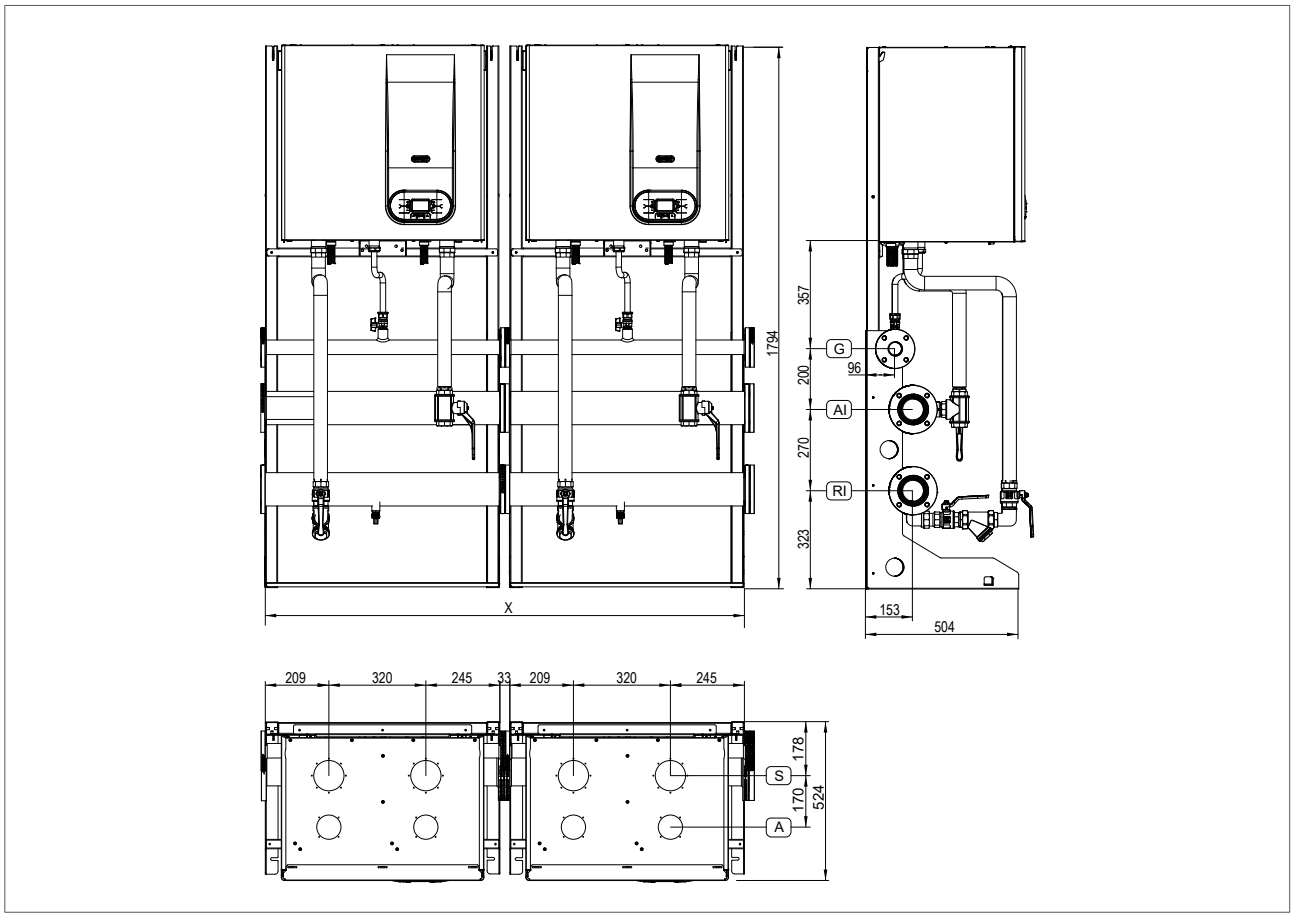

KEY

AI	C.H. FLOW	DN65-PN6
RI	C.H. RETURN	DN65-PN6
AB	C.H. FLOW CONNECTION TO DHW STORAGE TANK	Ø1"1/2
RB	C.H. RETURN CONNECTION FROM DHW STORAGE TANK	Ø1"
G	GAS	DN40-PN6
A	AIR INTAKE	Ø80
S	FLUE OUTLET	Ø80

SISTEMA models	**compositions**	**X** mm
200	2 X A1K 100	1581
300	3 X A1K 100	2388

RS VERSION FOR ADDITIONAL BOILER

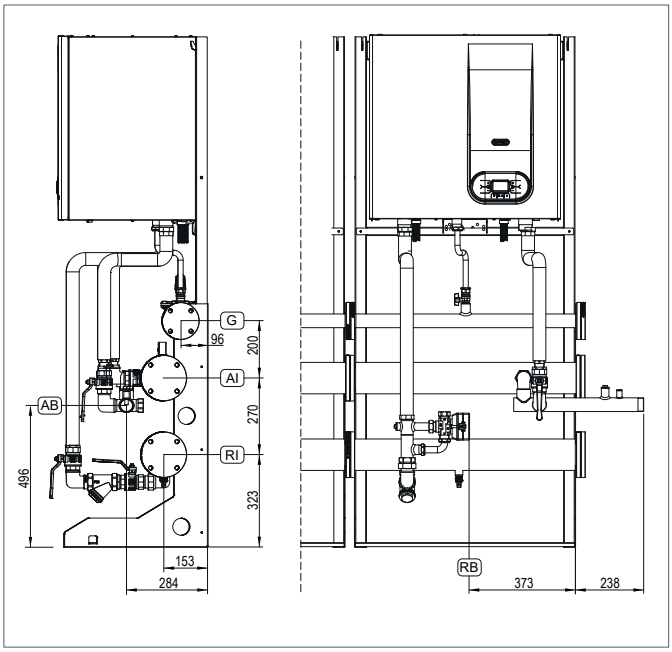

SISTEMA 350 - 450

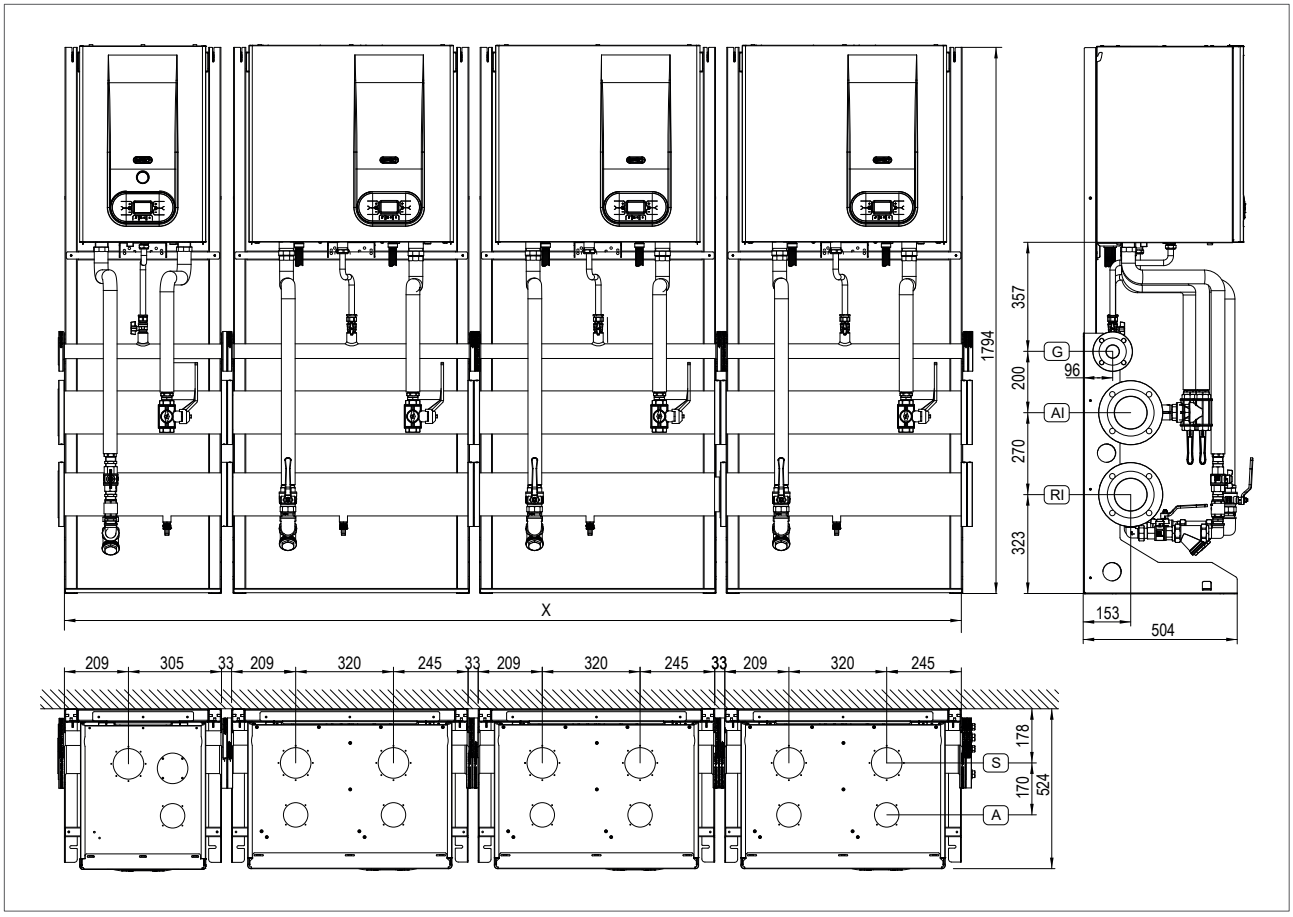

KEY

AI	C.H. FLOW	DN100-PN6
RI	C.H. RETURN	DN100-PN6
AB	C.H. FLOW CONNECTION TO DHW STORAGE TANK	Ø1"1/2
RB	C.H. RETURN CONNECTION FROM DHW STORAGE TANK	Ø1"
G	GAS	DN40-PN6
A	AIR INTAKE	Ø80
S	FLUE OUTLET	Ø80

SISTEMA models	**compositions**	**X** mm
350	1 x A1K 50 + 3 x A1K 100	2935
450	1 x A1K 50 + 4 x A1K 100	3742

ATTENTION: For outputs higher than 500 kW, please contact our technical department.

RS VERSION FOR ADDITIONAL BOILER

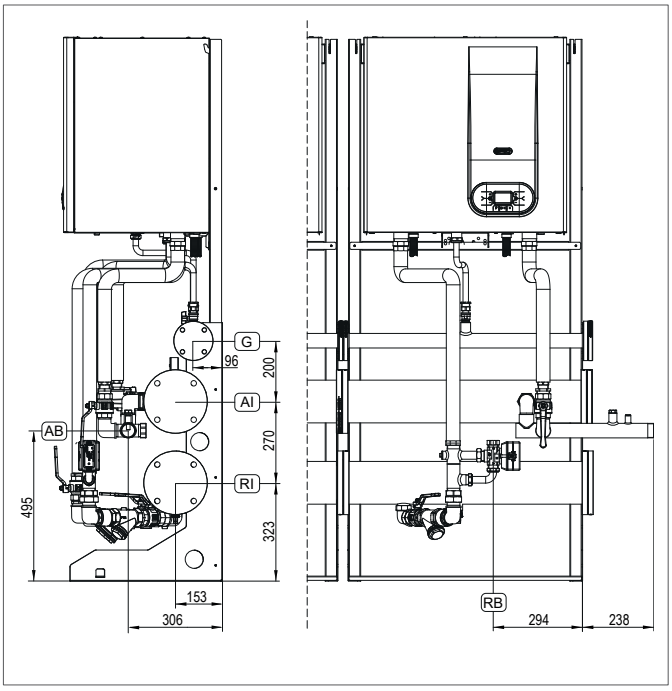

SISTEMA 400 - 500

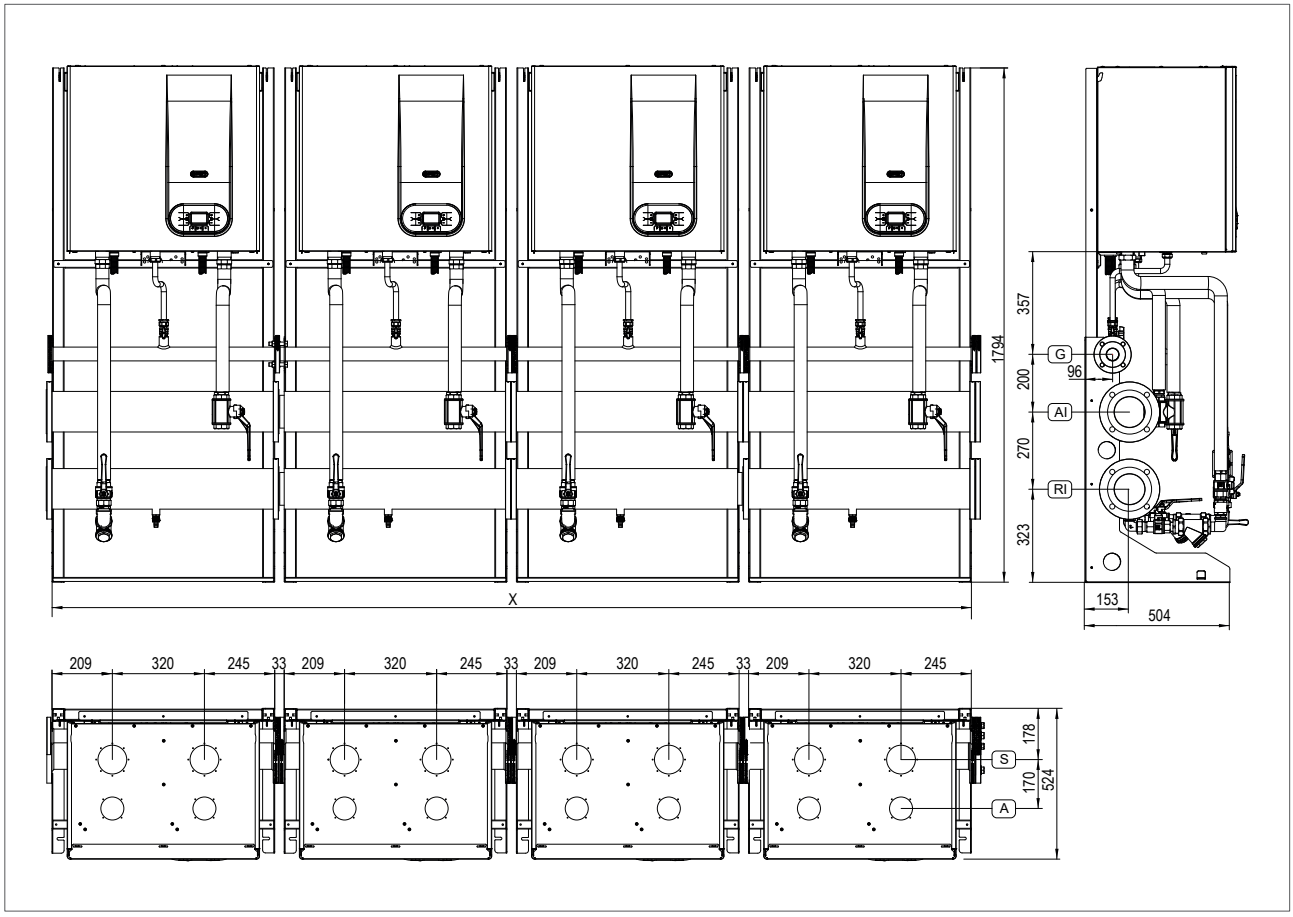

KEY

AI	C.H. FLOW	DN100-PN6
RI	C.H. RETURN	DN100-PN6
AB	C.H. FLOW CONNECTION TO DHW STORAGE TANK	Ø1"1/2
RB	C.H. RETURN CONNECTION FROM DHW STORAGE TANK	Ø1"
G	GAS	DN40-PN6
A	AIR INTAKE	Ø80
S	FLUE OUTLET	Ø80

SISTEMA models	**compositions**	**X** mm
400	4 x A1K 100	3195
500	5 x A1K 100	4002

ATTENTION: For outputs higher than 500 kW, please contact our technical department.

RS VERSION FOR ADDITIONAL BOILER

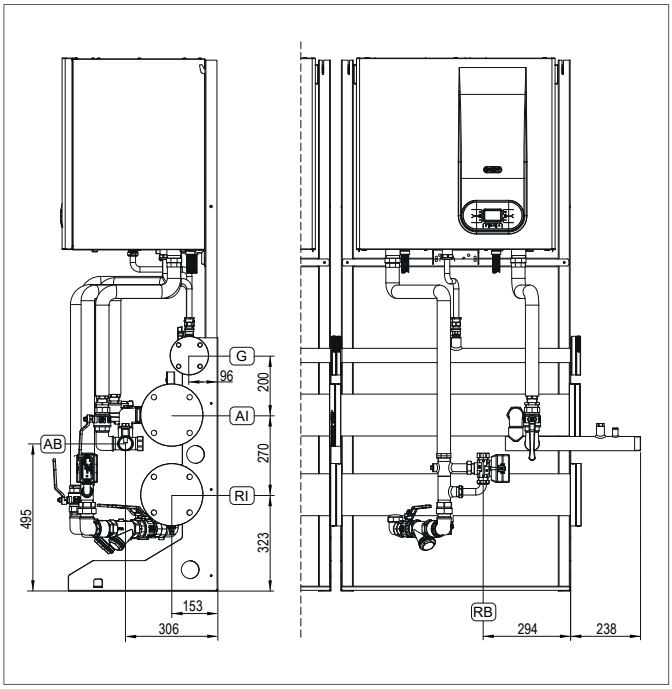

SISTEMA 200 - 800 - Back-to-back installation up to a max. of 8 boilers

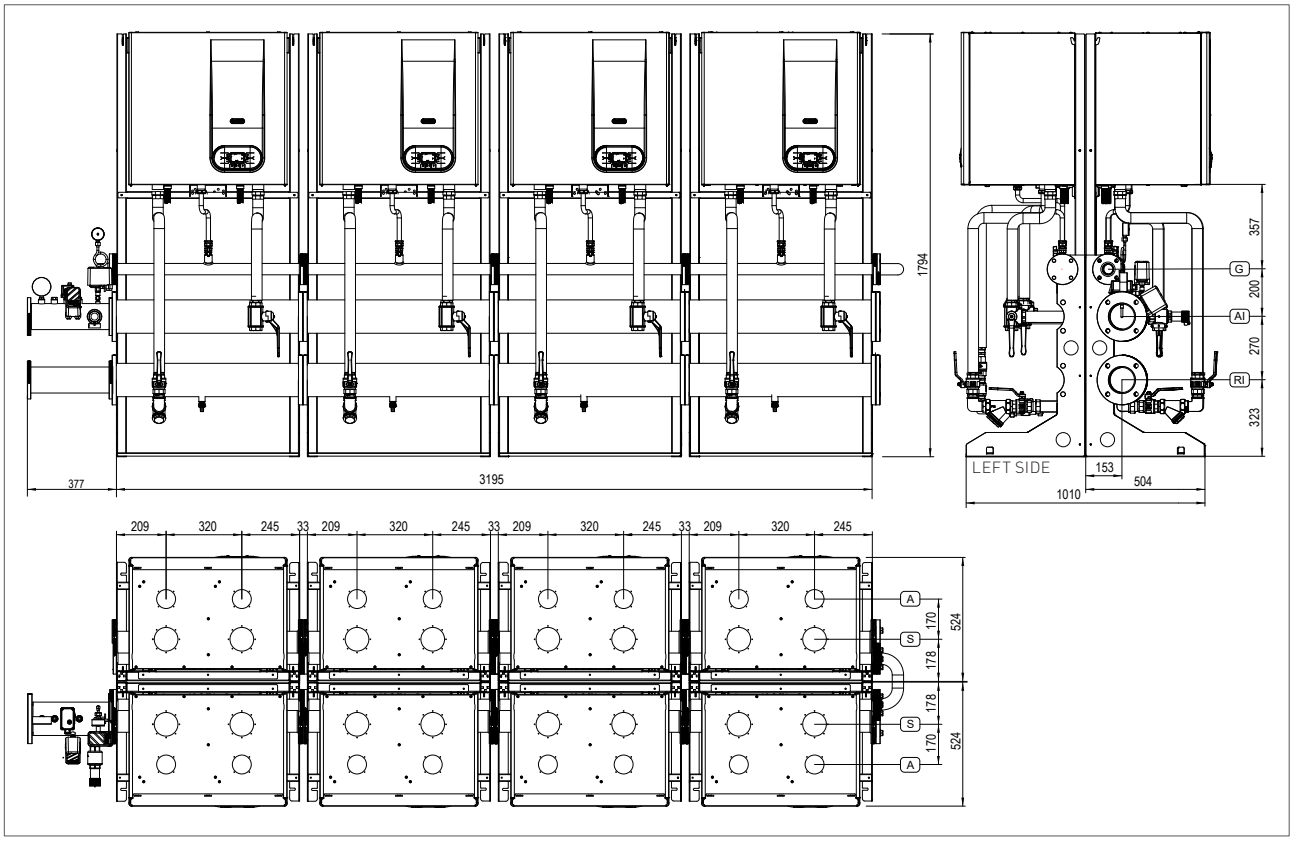

KEY

AI	C.H. FLOW	DN100
RI	C.H. RETURN	DN100
G	GAS	DN40
A	AIR INTAKE	Ø80
S	FLUE OUTLET	Ø80

SISTEMA models	**compositions**	X mm
200	2 x R1K 100	774
250	1 x A1K 50 + 2 x A1K 100	1321
300	3 x A1K 100	1581
350	1 x A1K 50 + 3 x A1K 100	1581
400	4 x A1K 100	1581
450	1 x A1K 50 + 4 x A1K 100	2388
500	5 x A1K 100	2388
600	6 x A1K 100	2388
700	7 x A1K 100	3195
800	8 x A1K 100	3195

RS VERSION FOR ADDITIONAL BOILER

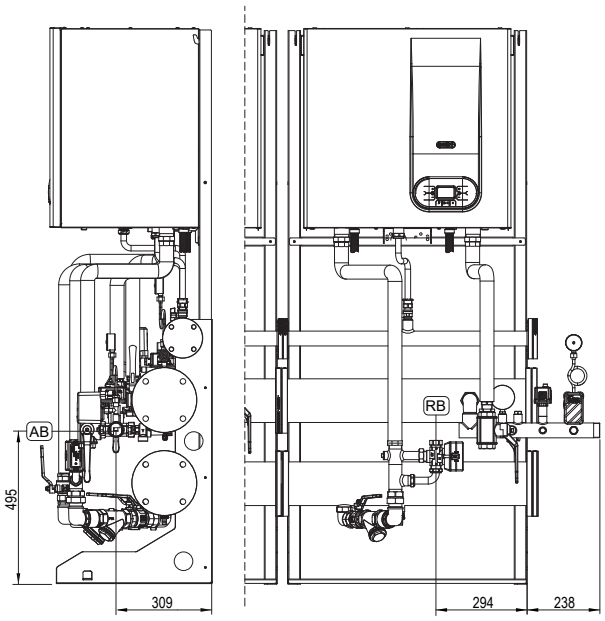

AB	C.H. FLOW CONNECTION TO DHW STORAGE TANK	Ø1"1/2
RB	C.H. RETURN CONNECTION FROM DHW STORAGE TANK	Ø1"

5. WATER CIRCUIT

SISTEMA 150 (output 150 kW) Cascade installation example

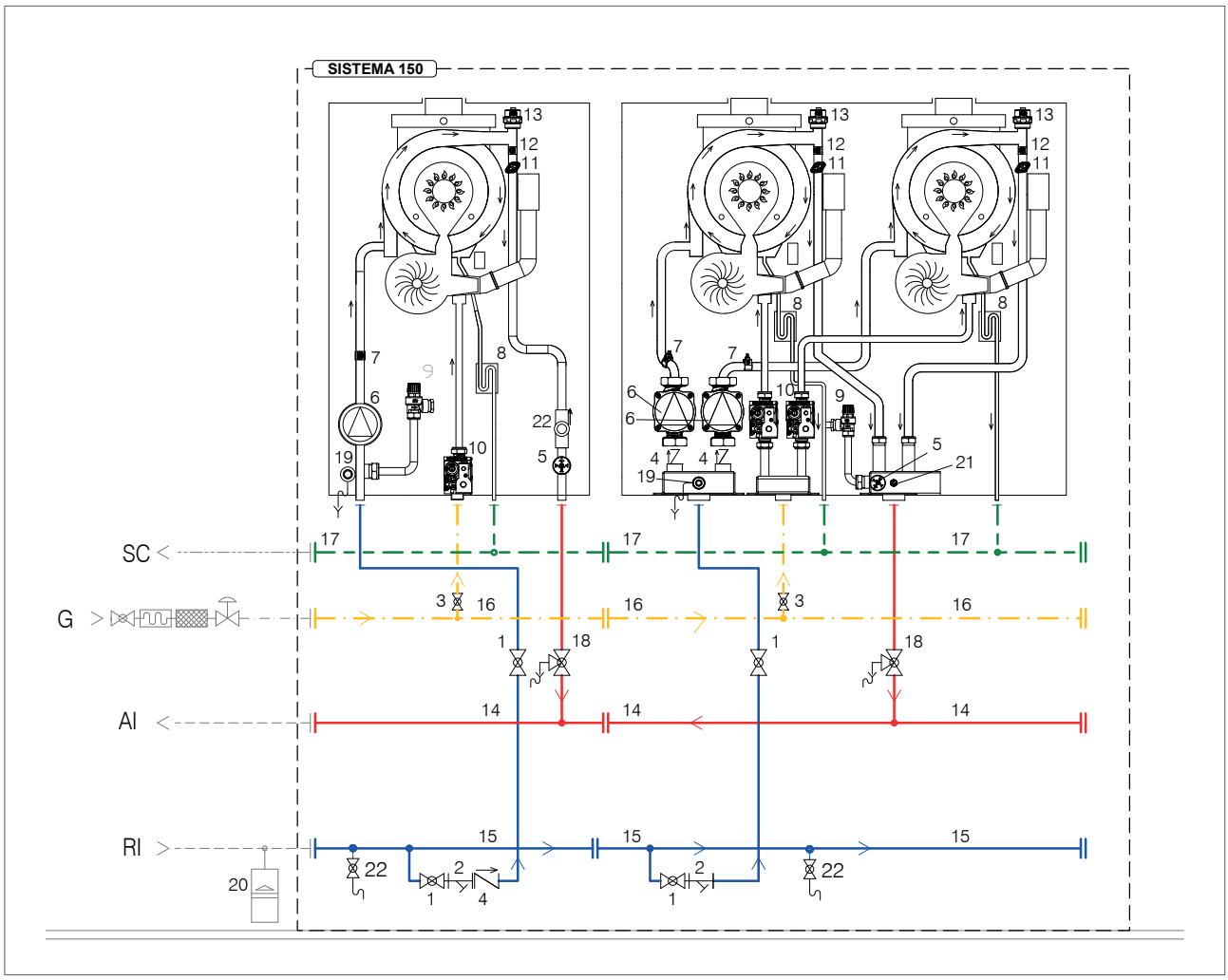

KEY

RI. C.H. RETURN
G. GAS
SC. CONDENSATE DRAIN
AI. C.H. FLOW

1. ISOLATING VALVE
2. STRAINER;
3. GAS VALVE
4. NO RETURN VALVE
5. WATER PRESSURE SWITCH
6. CIRCULATOR
7. HEATING RETURN PROBE
8. CONDENSATE COLLECTION SIPHON
9. SAFETY VALVE
10. ELECTRONIC GAS VALVE
11. HEATING SAFETY THERMOSTAT 95°C
12. HEATING PROBE
13. AUTOMATIC AIR RELIEF VALVE
14. HYDRAULIC MANIFOLD HEATING FLOW
15. HYDRAULIC MANIFOLD HEATING RETURN
16. HYDRAULIC MANIFOLD GAS
17. HYDRAULIC MANIFOLD CONDESANTE DRAIN (BY YHE INSTALLAER)
18. ISOLATING THREE-WAY VALVE
19. MANUAL AIR RELIEF VALVE
20. EXPANSION VESSEL (BY THE INSTALLER)
21. MANIFOLD HEATING FLOW SENSOR
22. SYSTEM DRAINING TAP

SISTEMA 150 RS (output 150 kW) Cascade installation example with remote storage cylinder connection

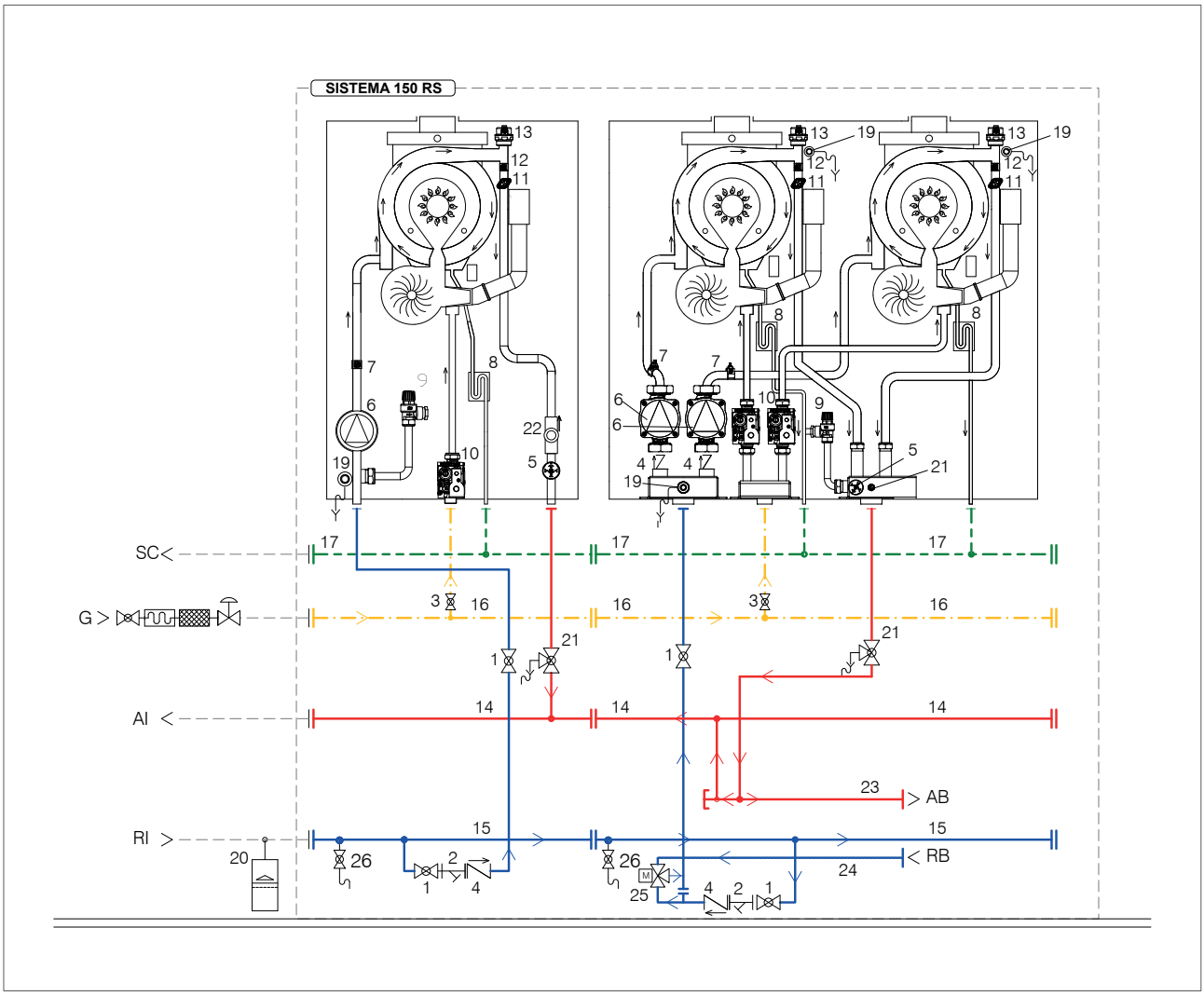

KEY

RI. C.H. RETURN
G. GAS
SC. CONDENSATE DRAIN
AI. C.H. FLOW
AB. C.H. FLOW CONNECTION TO DHW STORAGE TANK
RB. C.H. RETURN CONNECTION FROM DHW STORAGE TANK

1. ISOLATING VALVE
2. STRAINES
3. GAS VALVE
4. NO RETURN VALVE
5. WATER PRESSURE SWITCH
6. CIRCULATOR
7. HEATING RETURN PROBE
8. CONDENSATE COLLECTION SIPHON
9. SAFETY VALVE
10. ELECTRONIC GAS VALVE
11. HEATING SAFETY THERMOSTAT 95°C
12. HEATING PROBE
13. AUTOMATIC AIR RELIEF VALVE
14. HYDRAULIC MANIFOLD HEATING FLOW
15. HYDRAULIC MANIFOLD HEATING RETURN
16. HYDRAULIC MANIFOLD GAS
17. HYDRAULIC MANIFOLD CONDESANTE DRAIN (BY YHE INSTALLAER)
18. ISOLATING THREE-WAY VALVE
19. MANUAL AIR RELIEF VALVE
20. EXPANSION VESSEL (BY THE INSTALLER)
21. HEATING FLOW MANIFOLD SENSOR
22. FLUXMETER
23. HYDRAULIC MANIFOLD C.H. FLOW TO DHW STORAGE CYLINDER
24. HYDRAULIC MANIFOLD C.H. RETURN TO DHW STORAGE CYLINDER
25. DIVERTER VALVE
26. SYSTEM DRAINING TAP

Here below an example of a 400kw power cascade back-to-back installation - SISTEMA 400 (200+200).

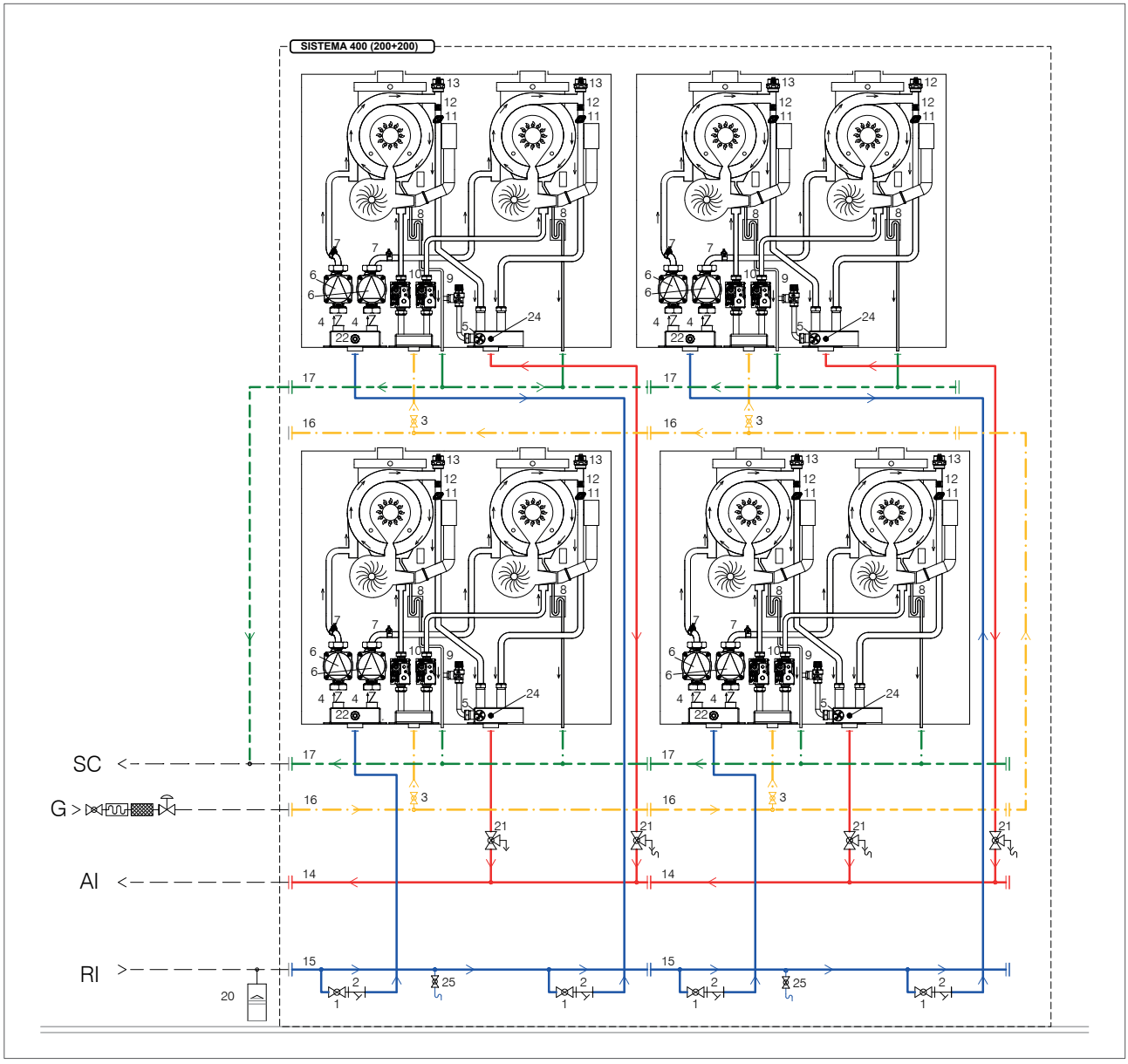

KEY

RI. C.H. RETURN
G. GAS
SC. CONDENSATE DRAIN
AI. C.H. FLOW

1. ISOLATING VALVE
2. STRAINES
3. GAS VALVE
4. NO RETURN VALVE
5. WATER PRESSURE SWITCH
6. CIRCULATOR
7. HEATING RETURN PROBE
8. CONDENSATE COLLECTION SIPHON
9. SAFETY VALVE
10. ELECTRONIC GAS VALVE
11. HEATING SAFETY THERMOSTAT 95°C
12. HEATING PROBE
13. AUTOMATIC AIR RELIEF VALVE
14. HYDRAULIC MANIFOLD HEATING FLOW
15. HYDRAULIC MANIFOLD HEATING RETURN
16. HYDRAULIC MANIFOLD GAS
17. HYDRAULIC MANIFOLD CONDESANTE DRAIN (BY YHE INSTALLAER)
18. HEATING FLOW TO DHW STORAGE CYLINDER
19. HEATING RETURN TO DHW STORAGE CYLINDER
20. EXPANSION VESSEL (BY THE INSTALLER)
21. ISOLATING THREE-WAY VALVE
22. MANUAL AIR RELIEF VALVE
23. DIVERTER VALVE
24. HEATING FLOW MANIFOLD SENSOR
25. SYSTEM DRAINING TAP

6. HEAD/FLOW DIAGRAM

CIRCULATOR

A1K 50 MODEL

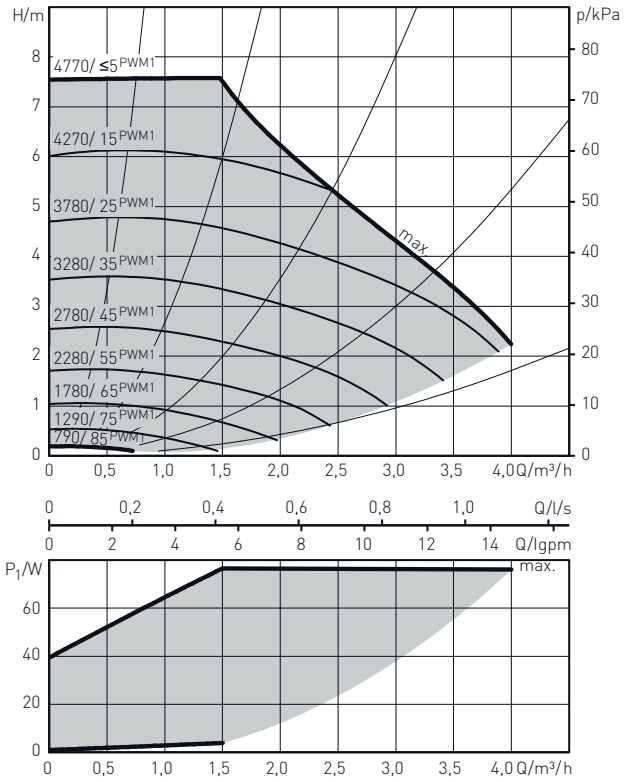

A1K 100 MODEL [1]

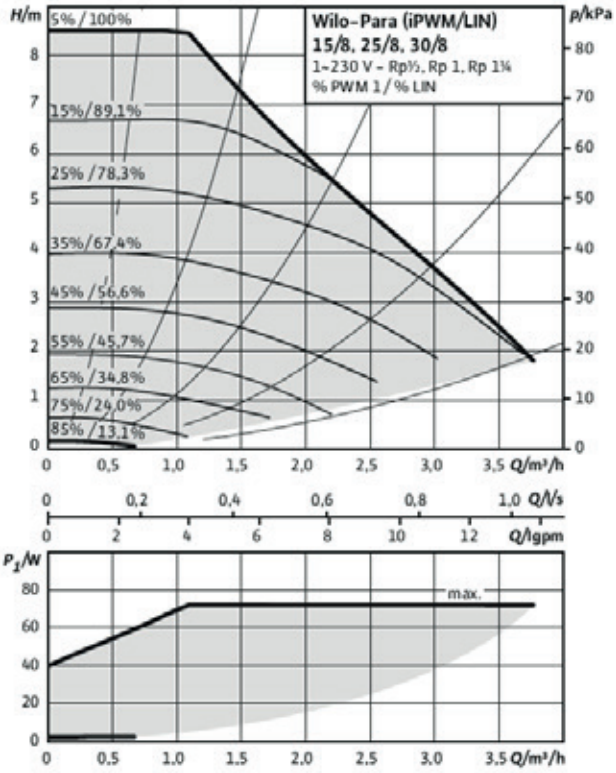

INDIVIDUAL BOILER [1]

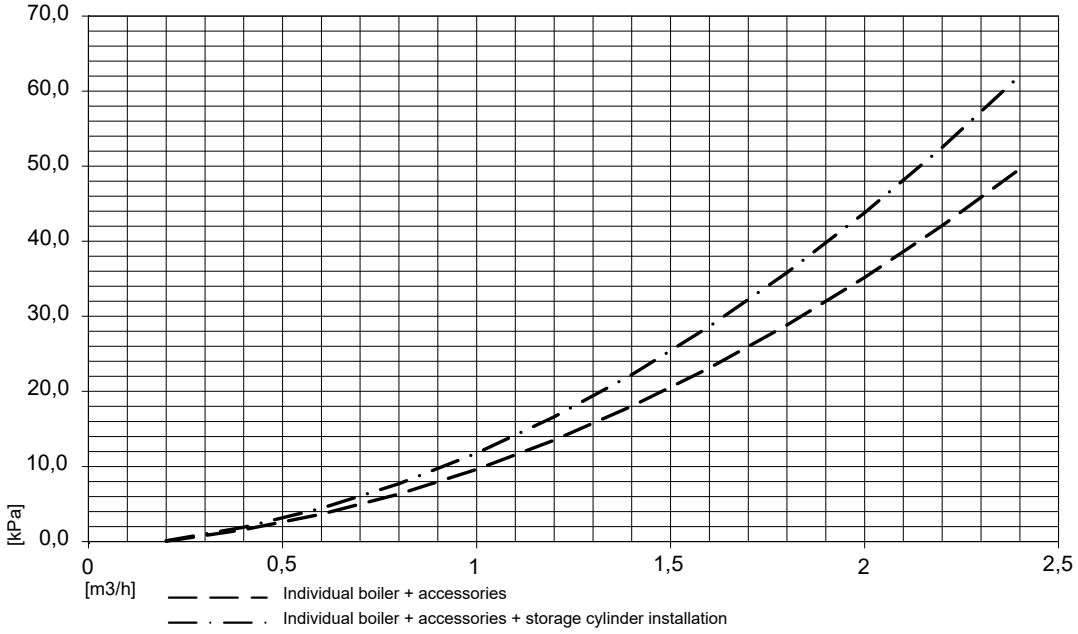

[1] Single thermal units

7. INSTALLATION TECHNICAL ASSEMBLY

SISTEMA 150 – 250 – 350 – 450 Installation technical assembly

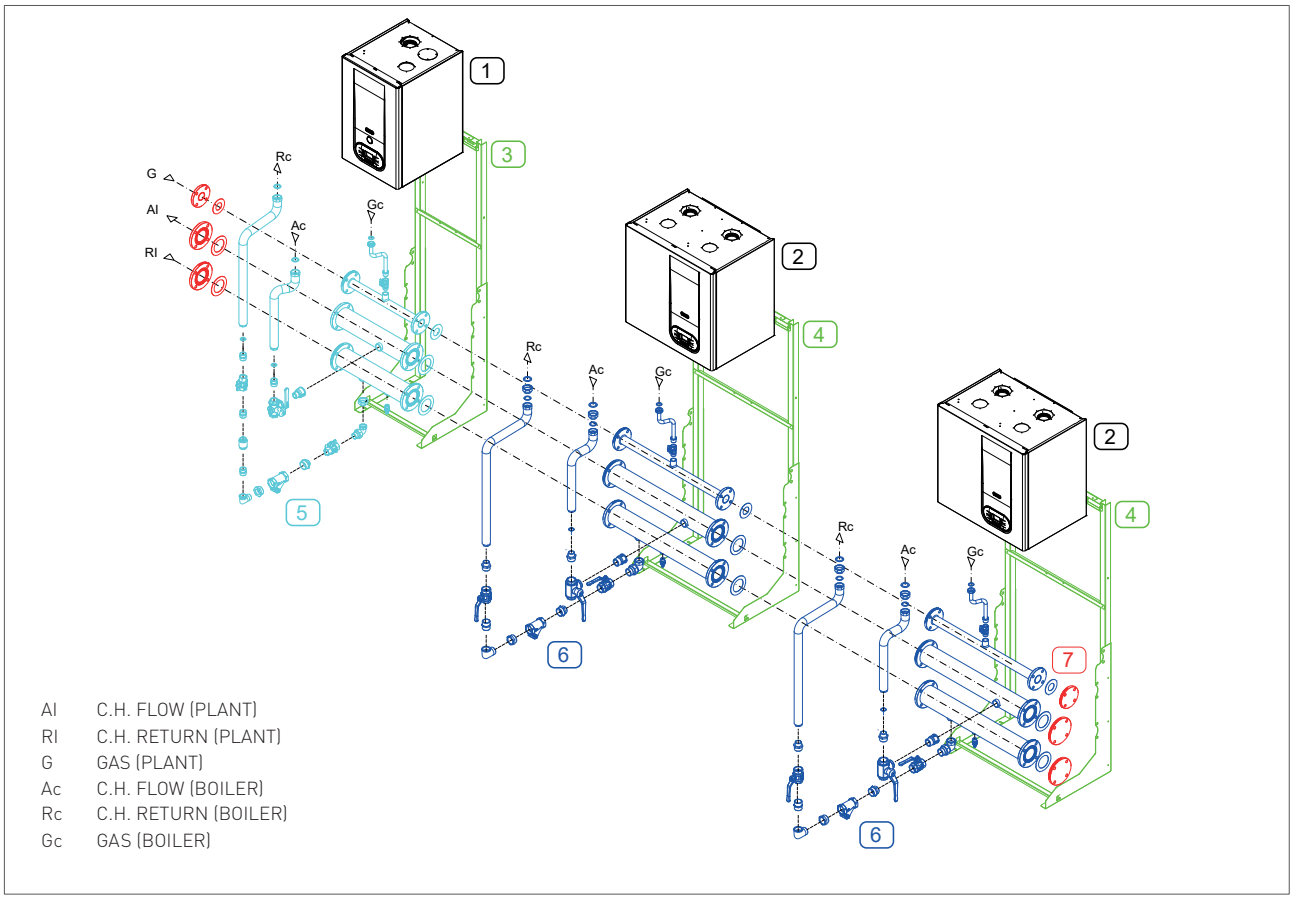

SISTEMA models	1 compositions	2 compositions	3 code accessory	4 code accessory	5 code accessory	6 code accessory	7 code accessory
150	1 x A1K 50	1 x A1K 100	1 x 12-01614	1 x 12-01713	1 x 65-00524	1 x 65-00410	1 x 65-00678
250	1 x A1K 50	2 x A1K 100	1 x 12-01614	2 x 12-01713	1 x 65-00524	2 x 65-00410	1 x 65-00678
350	1 x A1K 50	3 x A1K 100	1 x 12-01912	3 x 12-01932	1 x 65-00388	3 x 65-00530	1 x 65-00679
450	1 x A1K 50	4 x A1K 100	1 x 12-01912	4 x 12-01932	1 x 65-00388	4 x 65-00530	1 x 65-00679

code	description
12-01614	FREESTANDING FRAME – DN65 (Ø2"1/2) MANIFOLD FOR A1K 50 BOILER
12-01912	FREESTANDING FRAME – DN100 (Ø4") MANIFOLD FOR A1K 50 BOILER
12-01713	FREESTANDING FRAME – DN65 (Ø2"1/2) MANIFOLD FOR A1K 100 BOILER
12-01932	FREESTANDING FRAME – DN100 (Ø4") MANIFOLD FOR A1K 100 BOILER
65-00524	HYDRAULIC MANIFOLD DN65 (Ø2"1/2) KIT FOR A1K 50 BOILER IN CASCADE INSTALLATION - ADDITIONAL BOILER
65-00410	HYDRAULIC MANIFOLD DN65 (Ø2"1/2) KIT FOR A1K 100 BOILER IN CASCADE INSTALLATION - ADDITIONAL BOILER
65-00388	HYDRAULIC MANIFOLD DN100 (Ø4") KIT FOR A1K 50 BOILER IN CASCADE INSTALLATION - ADDITIONAL BOILER
65-00530	HYDRAULIC MANIFOLD DN100 (Ø4") KIT FOR A1K 100 BOILER IN CASCADE INSTALLATION - ADDITIONAL BOILER
65-00678	DN65 HEATING - DN40 GAS FLANGES KIT
65-00679	DN100 HEATING - DN40 GAS FLANGES KIT

SISTEMA 200 - 300 - 400 - 500 Installation technical assembly

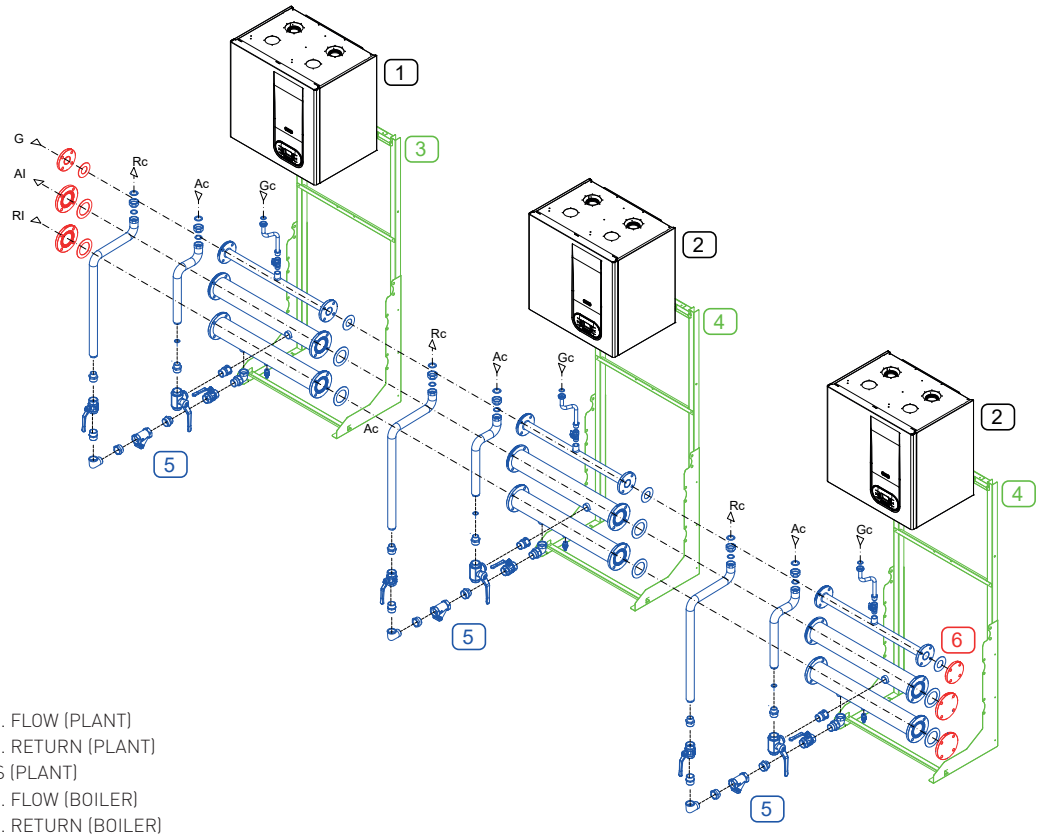

AI	C.H. FLOW (PLANT)
RI	C.H. RETURN (PLANT)
G	GAS (PLANT)
Ac	C.H. FLOW (BOILER)
Rc	C.H. RETURN (BOILER)
Gc	GAS (BOILER)

SISTEMA models	**1** compositions	**2** compositions	**3** code accessory	**4** code accessory	**5** code accessory	**6** code accessory	**7** code accessory
200	1 x A1K 100	1 x A1K 100	1 x 12-01713	1 x 12-01713	1 x 65-00410	1 x 65-00410	1 x 65-00678
300	1 x A1K 100	2 x A1K 100	1 x 12-01713	3 x 12-01713	1 x 65-00410	2 x 65-00410	1 x 65-00678
400	1 x A1K 100	3 x A1K 100	1 x 12-01912	3 x 12-01932	1 x 65-00530	3 x 65-00410	1 x 65-00679
500	1 x A1K 100	4 x A1K 100	1 x 12-01912	4 x 12-01932	1 x 65-00530	4 x 65-00410	1 x 65-00679

code	description
12-01713	FREESTANDING FRAME – DN65 (Ø2"1/2) MANIFOLD FOR A1K 100 BOILER
12-01932	FREESTANDING FRAME – DN100 (Ø4") MANIFOLD FOR A1K 100 BOILER
65-00410	HYDRAULIC MANIFOLD DN65 (Ø2"1/2) KIT FOR A1K 100 BOILER IN CASCADE INSTALLATION - ADDITIONAL BOILER
65-00530	HYDRAULIC MANIFOLD DN100 (Ø4") KIT FOR A1K 100 BOILER IN CASCADE INSTALLATION - ADDITIONAL BOILER
65-00678	DN65 HEATING - DN40 GAS FLANGES KIT
65-00679	DN100 HEATING - DN40 GAS FLANGES KIT

SISTEMA 150 - 250 – 350 – 450 RS Installation technical assembly

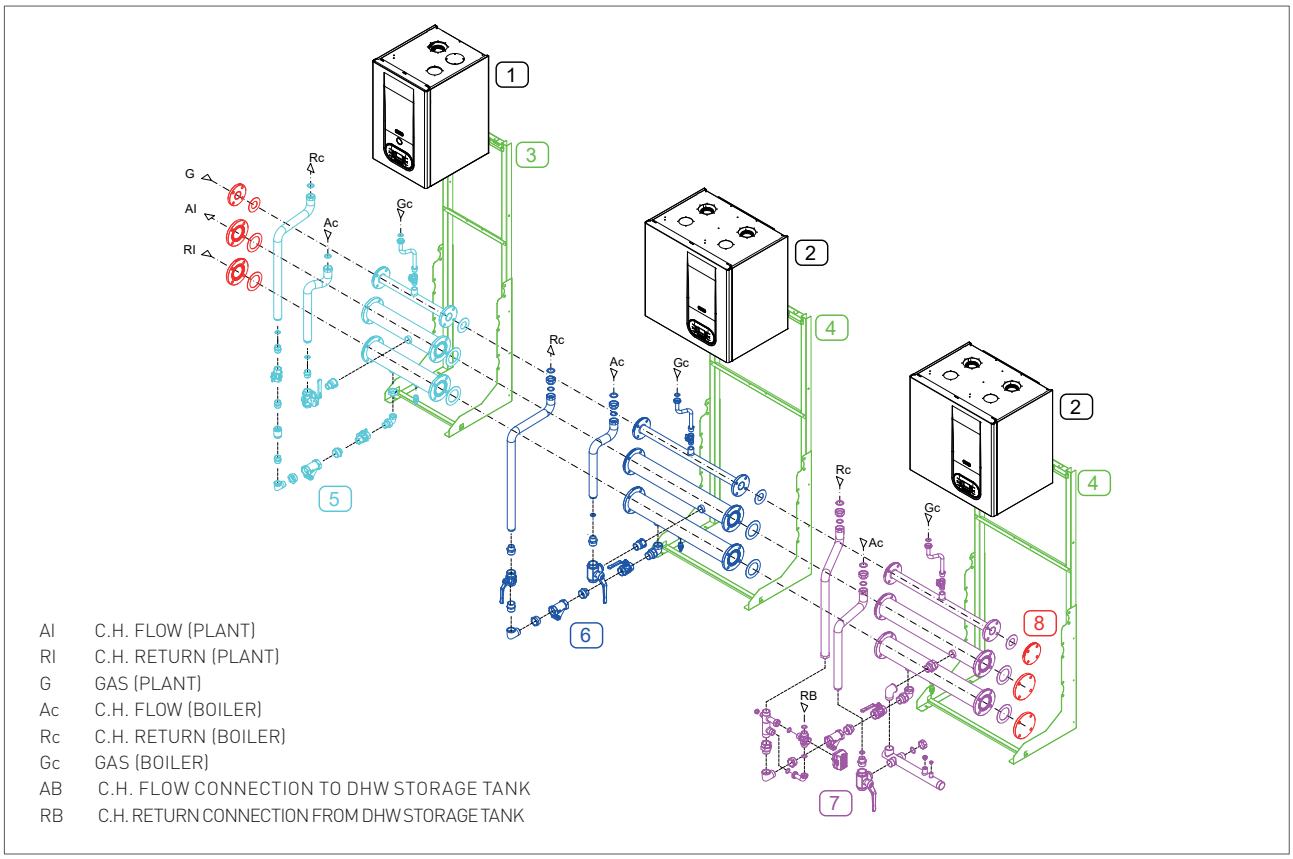

SISTEMA models	1 compositions	2 compositions	3 code accessory	4 code accessory	5 code accessory	6 code accessory	7 code accessory	8 code accessory
150	1 x A1K 50	1 x A1K 100	1 x 12-01614	1 x 12-01713	1 x 65-00524	-	1 x 65-00578	1 x 65-00678
250	1 x A1K 50	2 x A1K 100	1 x 12-01614	2 x 12-01713	1 x 65-00524	2 x 65-00410	1 x 65-00578	1 x 65-00678
350	1 x A1K 50	3 x A1K 100	1 x 12-01912	3 x 12-01932	1 x 65-00388	3 x 65-00530	1 x 65-00577	1 x 65-00679
450	1 x A1K 50	4 x A1K 100	1 x 12-01912	4 x 12-01932	1 x 65-00388	4 x 65-00530	1 x 65-00577	1 x 65-00679

code	description
12-01614	FREESTANDING FRAME – DN65 (Ø2"1/2) MANIFOLD FOR A1K 50 BOILER
12-01912	FREESTANDING FRAME – DN100 (Ø4") MANIFOLD FOR A1K 50 BOILER
12-01713	FREESTANDING FRAME – DN65 (Ø2"1/2) MANIFOLD FOR A1K 100 BOILER
12-01932	FREESTANDING FRAME – DN100 (Ø4") MANIFOLD FOR A1K 100 BOILER
65-00524	HYDRAULIC MANIFOLD DN65 (Ø2"1/2) KIT FOR A1K 50 BOILER IN CASCADE INSTALLATION - ADDITIONAL BOILER
65-00388	HYDRAULIC MANIFOLD DN100 (Ø4") KIT FOR A1K 50 BOILER IN CASCADE INSTALLATION - ADDITIONAL BOILER
65-00410	HYDRAULIC MANIFOLD DN65 (Ø2"1/2) KIT FOR A1K 100 BOILER IN CASCADE INSTALLATION - ADDITIONAL BOILER
65-00530	HYDRAULIC MANIFOLD DN100 (Ø4") KIT FOR A1K 100 BOILER IN CASCADE INSTALLATION - ADDITIONAL BOILER
65-00578	HYDRAULIC MANIFOLD DN65 (Ø2"1/2) KIT FOR A1K 100 BOILER IN CASCADE INSTALLATION + 3-WAY VALVE KIT FITTED FOR D.H.W. STORAGE CYLINDER CONNECTION - ADDITIONAL BOILER
65-00577	HYDRAULIC MANIFOLD DN100 (Ø4") KIT FOR A1K 100 BOILER IN CASCADE INSTALLATION + 3-WAY VALVE KIT FITTED FOR D.H.W. STORAGE CYLINDER CONNECTION - ADDITIONAL BOILER
65-00678	DN65 HEATING - DN40 GAS FLANGES KIT
65-00679	DN100 HEATING - DN40 GAS FLANGES KIT

SISTEMA 200 - 300 - 400 - 500 RS Installation technical assembly

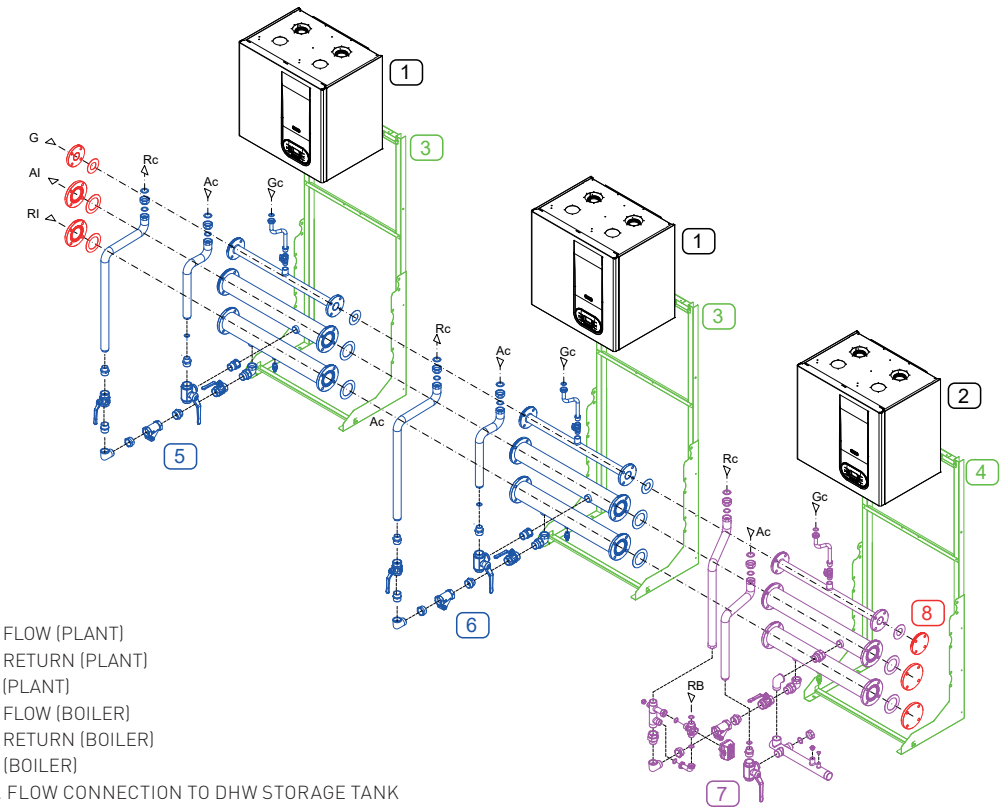

Al	C.H. FLOW (PLANT)
Rl	C.H. RETURN (PLANT)
G	GAS (PLANT)
Ac	C.H. FLOW (BOILER)
Rc	C.H. RETURN (BOILER)
Gc	GAS (BOILER)
AB	C.H. FLOW CONNECTION TO DHW STORAGE TANK
RB	C.H. RETURN CONNECTION FROM DHW STORAGE TANK

SISTEMA models	1 compositions	2 compositions	3 code accessory	4 code accessory	5 code accessory	6 code accessory	7 code accessory	8 code accessory
200	1 x A1K 100	1 x A1K 100	1 x 12-01713	1 x 12-01713	1 x 65-00410	-	1 x 65-00578	1 x 65-00678
300	1 x A1K 100	2 x A1K 100	1 x 12-01713	3 x 12-01713	1 x 65-00410	1 x 65-00410	1 x 65-00578	1 x 65-00678
400	1 x A1K 100	3 x A1K 100	1 x 12-01912	3 x 12-01912	1 x 65-00410	3 x 65-00410	1 x 65-00577	1 x 65-00679
500	1 x A1K 100	4 x A1K 100	1 x 12-01912	4 x 12-01912	1 x 65-00410	3 x 65-00410	1 x 65-00577	1 x 65-00679

code	description
12-01713	FREESTANDING FRAME – DN65 MANIFOLD FOR A1K 100
12-01912	FREESTANDING FRAME – DN100 MANIFOLD FOR A1K 100
12-01713	FREESTANDING FRAME – DN65 (Ø2"1/2) MANIFOLD FOR A1K 100 BOILER
12-01932	FREESTANDING FRAME – DN100 (Ø4") MANIFOLD FOR A1K 100 BOILER
65-00410	HYDRAULIC MANIFOLD DN65 (Ø2"1/2) KIT FOR A1K 100 BOILER IN CASCADE INSTALLATION - ADDITIONAL BOILER
65-00530	HYDRAULIC MANIFOLD DN100 (Ø4") KIT FOR A1K 100 BOILER IN CASCADE INSTALLATION - ADDITIONAL BOILER
65-00578	HYDRAULIC MANIFOLD DN65 (Ø2"1/2) KIT FOR A1K 100 BOILER IN CASCADE INSTALLATION + 3-WAY VALVE KIT FITTED FOR D.H.W. STORAGE CYLINDER CONNECTION - ADDITIONAL BOILER
65-00577	HYDRAULIC MANIFOLD DN100 (Ø4") KIT FOR A1K 100 BOILER IN CASCADE INSTALLATION + 3-WAY VALVE KIT FITTED FOR D.H.W. STORAGE CYLINDER CONNECTION - ADDITIONAL BOILER
65-00678	DN65 HEATING - DN40 GAS FLANGES KIT
65-00679	DN100 HEATING - DN40 GAS FLANGES KIT

8. ACCESSORIES

HYDRAULIC MANIFOLD KITS FOR BOILER IN CASCADE INSTALLATION

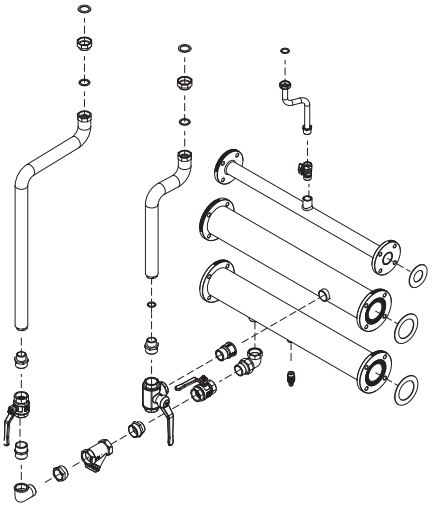

HYDRAULIC MANIFOLD KIT BOILER IN CASCADE INSTALLATION - ADDITIONAL BOILER

AVAILABLE KITS:
DN 65 FOR A1K 50 BOILER - code 65-00524
DN 100 FOR A1K 50 BOILER - code 65-00388

The kit includes:

- isolating valves: to guarantee ease of maintenance/ service or a temporary exclusion of only 1 boiler without interrupting the cascade installation operation;
- strainer to protect the boiler from eventual obstruction crated by impurities of the hydraulic circuit;
- heating flow vertical connector
- heating return vertical connector
- heating flow manifold DN 65/100 PN6
- heating return manifold DN 65/100 PN6
- non-return valve for each individual boiler to avoid any circulation while the boiler is OFF;

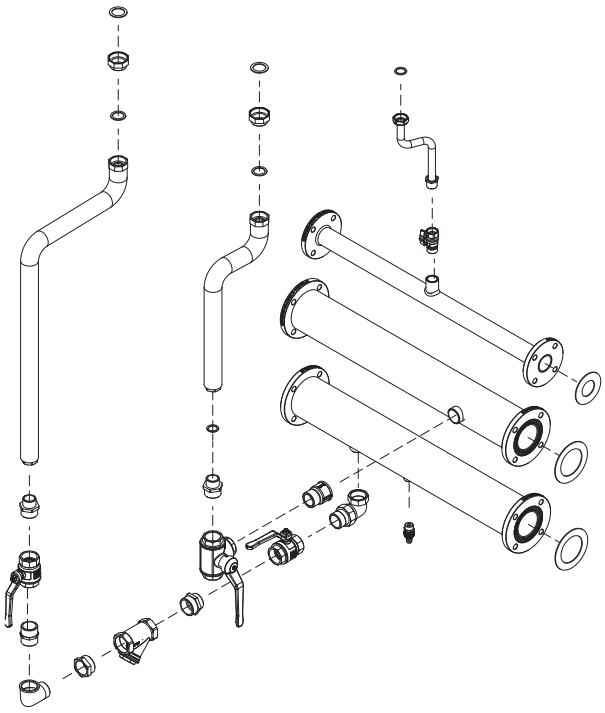

HYDRAULIC MANIFOLD KIT BOILER IN CASCADE INSTALLATION + 3-WAY VALVE KIT FITTED FOR D.H.W. STORAGE CYLINDER CONNECTION - ADDITIONAL BOILER

AVAILABLE KITS:
DN 65 FOR A1K 100 BOILER - code 65-00410
DN 100 FOR A1K 100 BOILER - code 65-00530

Il kit comprende:
The kit includes:

- isolating valves: to guarantee ease of maintenance/ service or a temporary exclusion of only 1 boiler without interrupting the cascade installation operation;
- strainer to protect the boiler from eventual obstruction crated by impurities of the hydraulic circuit;
- heating flow vertical connector
- heating return vertical connector
- heating flow manifold DN 65/100 PN6
- heating return manifold DN 65/100 PN6
- non-return valve for each individual boiler to avoid any circulation while the boiler is OFF;
- 3-way valve (to feed the D.H.W. production circuit)

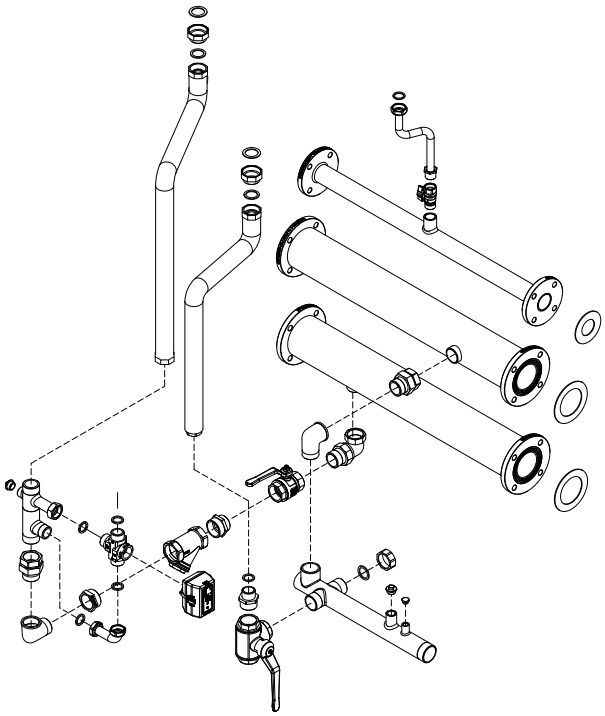

HYDRAULIC MANIFOLD KIT BOILER IN CASCADE INSTALLATION + 3-WAY VALVE KIT FITTED FOR D.H.W. STORAGE CYLINDER CONNECTION - ADDITIONAL BOILER

AVAILABLE KITS:
DN 100 FOR A1K 100 BOILER - code 65-00577
DN 65 FOR A1K 100 BOILER - code 65-00578

Il kit comprende:
The kit includes:

- isolating valves: to guarantee ease of maintenance/ service or a temporary exclusion of only 1 boiler without interrupting the cascade installation operation;
- strainer to protect the boiler from eventual obstruction crated by impurities of the hydraulic circuit;
- heating flow vertical connector
- heating return vertical connector
- heating flow manifold DN 65/100 PN6
- heating return manifold DN 65/100 PN6
- non-return valve for each individual boiler to avoid any circulation while the boiler is OFF;
- 3-way valve (to feed the D.H.W. production circuit)

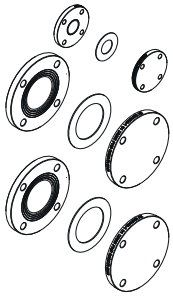

FLANGE KIT

DN 65-40 - PN6 code 65-00678

DN 100-40 - PN6 code 65-00679

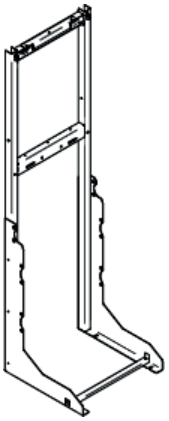

FREESTANDING FRAME :

DN65 (Ø2"1/2) MANIFOLD FOR A1K 50 BOILER - code 12-01614

DN100 (Ø4") MANIFOLD FOR A1K 50 BOILER - code 12-01912

DN65 (Ø2"1/2) MANIFOLD FOR A1K 100 BOILER - code 12-01713

DN100 (Ø4") MANIFOLD FOR A1K 100 BOILER - code 12-01932

Attention:

The strainer and the non-return valve must be installed correctly. The installation of an additional filter on the secondary circuit is recommended especially with old hydraulic systems.

HYDRAULIC COMPENSATOR KIT

It is absolutely necessary to install a hydraulic compensator to guarantee the correct operation of the boiler and to avoid any problem with secondary circuit flow variations.

DN 150 - DN65 fittings

for cascade installation with power up to 300 kW

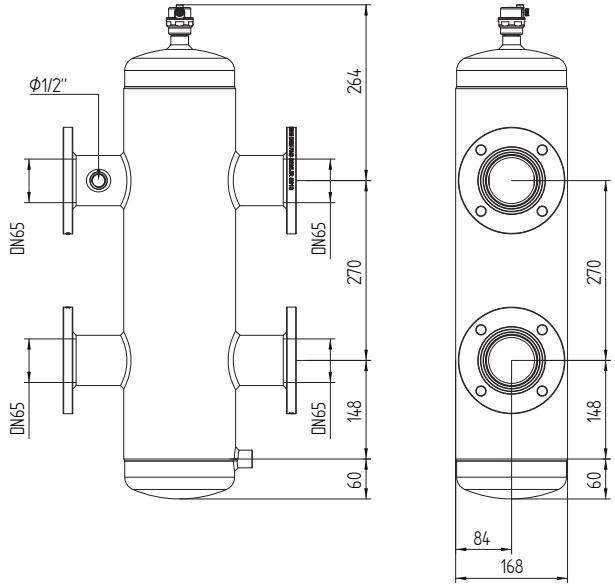

DN 200 - DN100 fittings

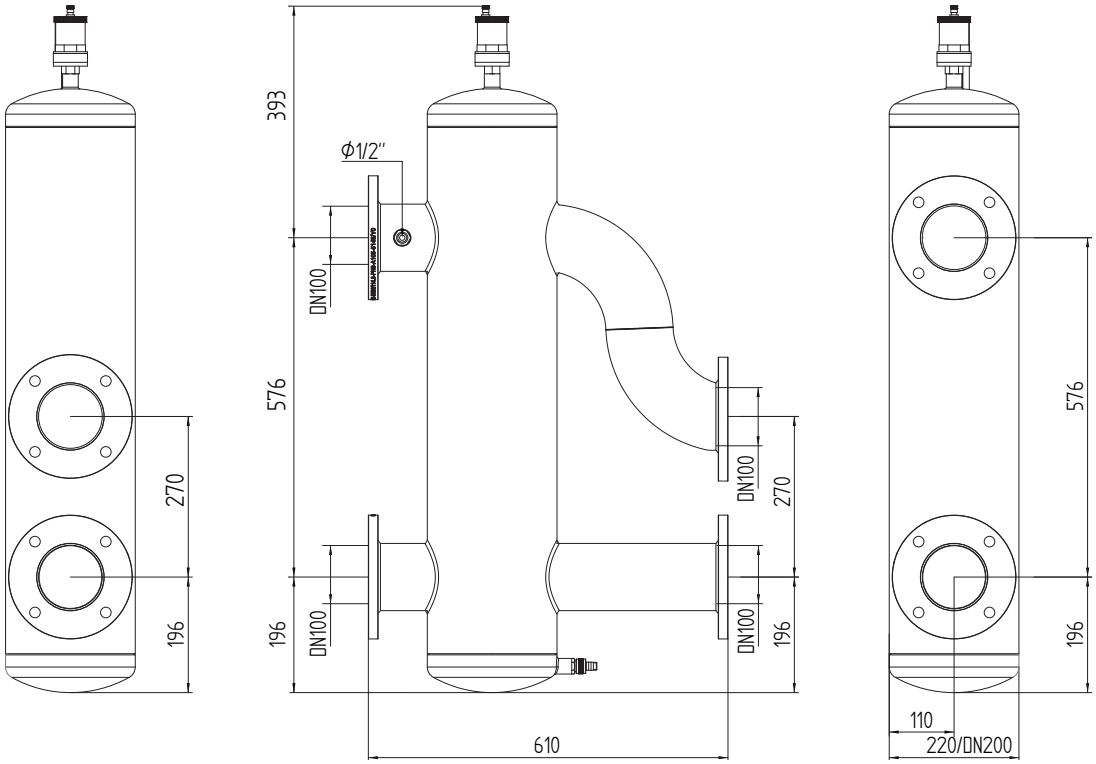

PLATE HEAT EXCHANGER

In case of a standard boiler's replacement in an old system with impurities and in case of problems during the system flushing, the installation of a heat exchanger is recommended to prevent boiler's obstructions that might compromise its functioning. The heat exchanger, interface between the primary circuit which includes the boiler and the secondary circuit, guarantees a real separation of thermal carriers flows and the consequently boiler safeguard.

EXCHANGER TABLE

SISTEMA version	Primary circuit				Secondary circuit					Plate heat exchanger		
	Q	T_{IN}	T_{OUT}	H_{MAX}	Q	T_{IN}	T_{OUT}	H_{MAX}				
	litres/h	°C	°C	kPa	litres/h	°C	°C	kPa	code	model	plate	type
150	6450	80	59.9	5.49	8600	55	70	9.46	25-00733	Z3	29	ispezionabile
				4.10				7.07	25-00702	ZB400	80	saldobrasato
200	8600	80	59.9	5.32	11467	55	70	9.16	25-00476	Z3	39	ispezionabile
				6.00				10.33	25-00703	ZB450	80	saldobrasato
250	10750	80	60	5,22	14333	55	70	8,99	25-00534	Z3	49	inspected
				5,97				10,29	25-00704	ZB450	100	brazed
300	12900	80	59.9	5.49	17200	55	70	9.46	25-00712	Z3	57	ispezionabile
				5.95				10.25	25-00736	ZB450	120	saldobrasato
350	15050	80	60	5,39	20067	55	70	9,29	25-00713	Z3	67	inspected
				5,24				9,02	25-00706	ZB450	150	brazed
400	17200	80	59.9	5.32	22933	55	70	9.16	25-00741	Z3	77	ispezionabile
				6.67				11.49	25-00737	ZB450	150	saldobrasato
450	19350	80	60	5,49	25800	55	70	9,46	25-00716	Z3	85	inspected
				4,55				7,84	25-00707	ZB700	100	brazed
500	21500	80	59.9	5.42	28667	55	70	9.34	25-00743	Z3	95	ispezionabile
				5.51				9.20	25-00738	ZB700	100	saldobrasato

NOTES: The dimensions shown in the table must be considered as purely indicative and are therefore subject to design verification by the professional who draws up the project and are to be considered rough.

9. TYPES OF FUME EXHAUST SYSTEMS

For the flue exhaust kits of the individual modules, see the technical data sheet "R1K_A1K_Scheda prodotto_2101.1_ING_ALE_Alta potenza"

10. CASCADE REGULATION

This device is a climatic regulator and a digital cascade/sequence regulator. It manages cascade systems made by maximum 8 boilers and controls thermal systems made by different circuits such as two mixed circuits, a DHW circuit, a loop circuit and a solar circuit. The ModBus unit allows the regulator to control all functions and to guarantee a total electronic modulation of boilers according to the requested output.

	code 40-00337	CASCADE REGULATOR MODBUS DDC-mPID4DSP2 (MASTER)
	code 65-00691	SOLAR ELECTRONIC BOARD (SLAVE)
	code 65-00544	CONTROL BOX OT/ModBus
	code 40-00344	HEATING CIRCUIT ROOM TEMPERATURE CONTROLLER
	code 73518LA	OUTDOOR TEMPERATURE SENSOR
	code 40-00355	WEB VISOR - CASCADE SYSTEM REMOTE CONTROLLER
-	code 40-00351	MANIFOLD / MIXING CIRCUIT SENSOR
-	code 40-00346	D.H.W. STORAGE CYLINDER / SOLAR STORAGE CYLINDER SENSOR CABLE SBS - SBI2
-	code 40-00347	SOLAR STORAGE CYLINDER SENSOR CABLE SBI
-	code 31409LA	SOLAR COLLECTOR SENSOR SBS

11. SYSTEM MECHANICAL CIRCUIT

SISTEMA - Only heating

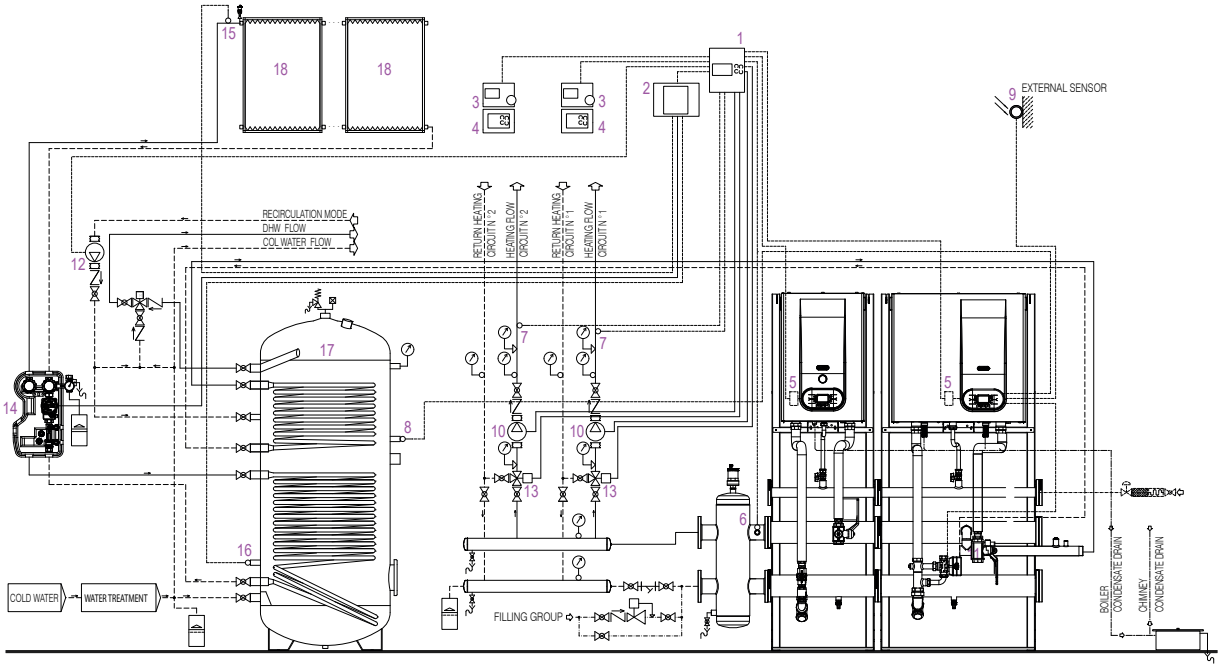

POS.	DESCRIPTION	CODE
1	CASCADE REGULATOR MODBUS DDC-mPID4DSP2 (MASTER)	40-00337
2	SOLAR ELECTRONIC BOARD (SLAVE)	65-00691
3	HEATING CIRCUIT ROOM THERMOSTAT	-
4	HEATING CIRCUIT ROOM TEMPERATURE CONTROLLER (IN ALTERNATIVE TO HEATING CIRCUIT ROOM THERMOSTAT)	40-00344
5	CONTROL BOX OT/ModBus	65-00544
6	MANIFOLD SENSOR (MANIFOLD / MIXING CIRCUIT SENSOR)	40-00351
7	HEATING FLOW SENSOR MIXING HEATING CIRCUIT (MANIFOLD / MIXING CIRCUIT SENSOR)	40-00351
8	D.H.W. STORAGE CYLINDER / SOLAR STORAGE CYLINDER SENSOR CABLE SBS - SBI2	40-00346
9	OUTDOOR TEMPERATURE SENSOR	73518LA
10	MIXING HEATING CIRCUIT PUMP	-
11	D.H.W. CIRCUIT PUMP	-
12	FILLING LOOP PUMP	-
13	3-WAY MIXING VALVE HEATING CIRCUIT	-
14	SOLAR CIRCUIT PUMP	-
15	SOLAR COLLECTOR SENSOR SBS	31409LA
16	SOLAR STORAGE CYLINDER SENSOR CABLE SBI	40-00347
17	D.H.W. STORAGE CYLINDER	-
18	SOLAR COLLECTOR	-

SISTEMA RS - Only heating + storage cylinder installation

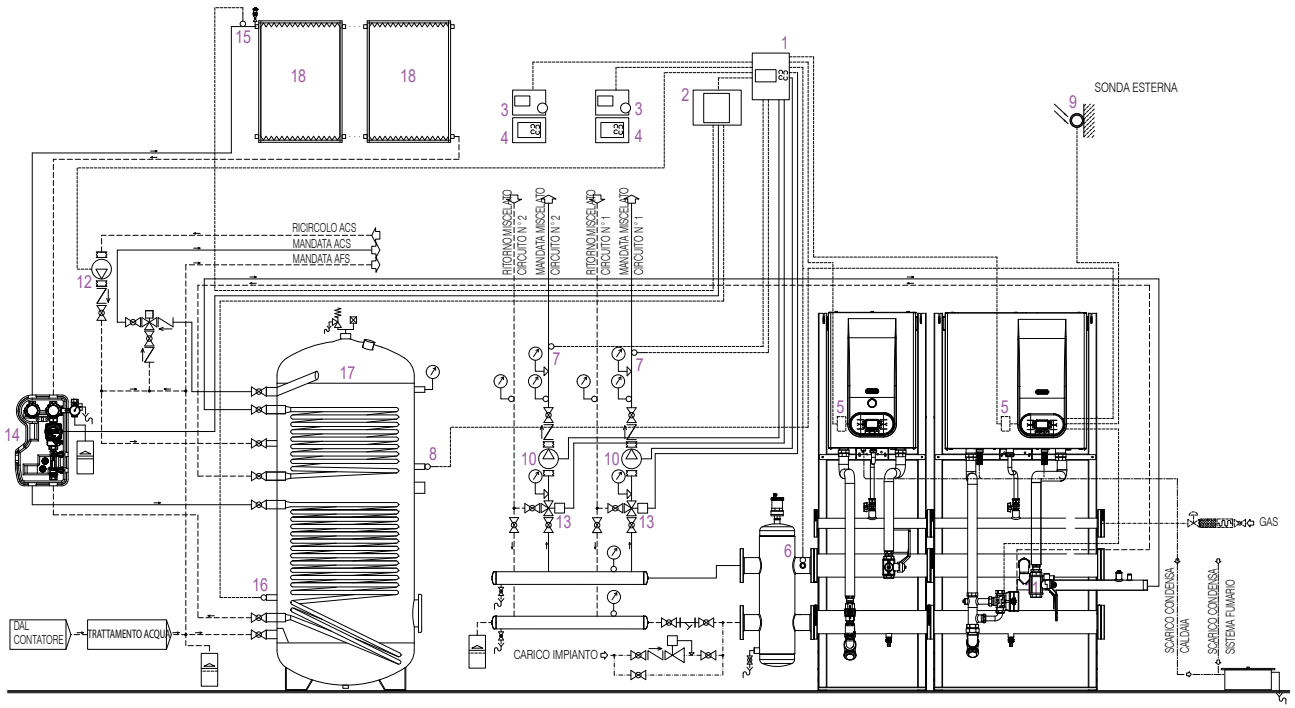

POS.	DESCRIPTION	CODE
1	CASCADE REGULATOR MODBUS DDC-mPID4DSP2 (MASTER)	40-00337
2	SOLAR ELECTRONIC BOARD (SLAVE)	65-00691
3	HEATING CIRCUIT ROOM THERMOSTAT	-
4	HEATING CIRCUIT ROOM TEMPERATURE CONTROLLER (IN ALTERNATIVE TO HEATING CIRCUIT ROOM THERMOSTAT)	40-00344
5	CONTROL BOX OT/ModBus	65-00544
6	MANIFOLD SENSOR (MANIFOLD / MIXING CIRCUIT SENSOR)	40-00351
7	HEATING FLOW SENSOR MIXING HEATING CIRCUIT (MANIFOLD / MIXING CIRCUIT SENSOR)	40-00351
8	D.H.W. STORAGE CYLINDER / SOLAR STORAGE CYLINDER SENSOR CABLE SBS - SBI2	40-00346
9	OUTDOOR TEMPERATURE SENSOR	73518LA
10	MIXING HEATING CIRCUIT PUMP	-
11	3-WAY VALVE FOR D.H.W. STORAGE CYLINDER CONNECTION	-
12	FILLING LOOP PUMP	-
13	3-WAY MIXING VALVE HEATING CIRCUIT	-
14	SOLAR CIRCUIT PUMP	-
15	SOLAR COLLECTOR SENSOR SBS	31409LA
16	SOLAR STORAGE CYLINDER SENSOR CABLE SBI	40-00347
17	D.H.W. STORAGE CYLINDER	-
18	SOLAR COLLECTOR	-

12. WIRING DIAGRAMS

The following electric diagrams are to be considered purely informative. For electrical connections of the various cascade systems, always refer to the wiring diagram provided by the system designer .

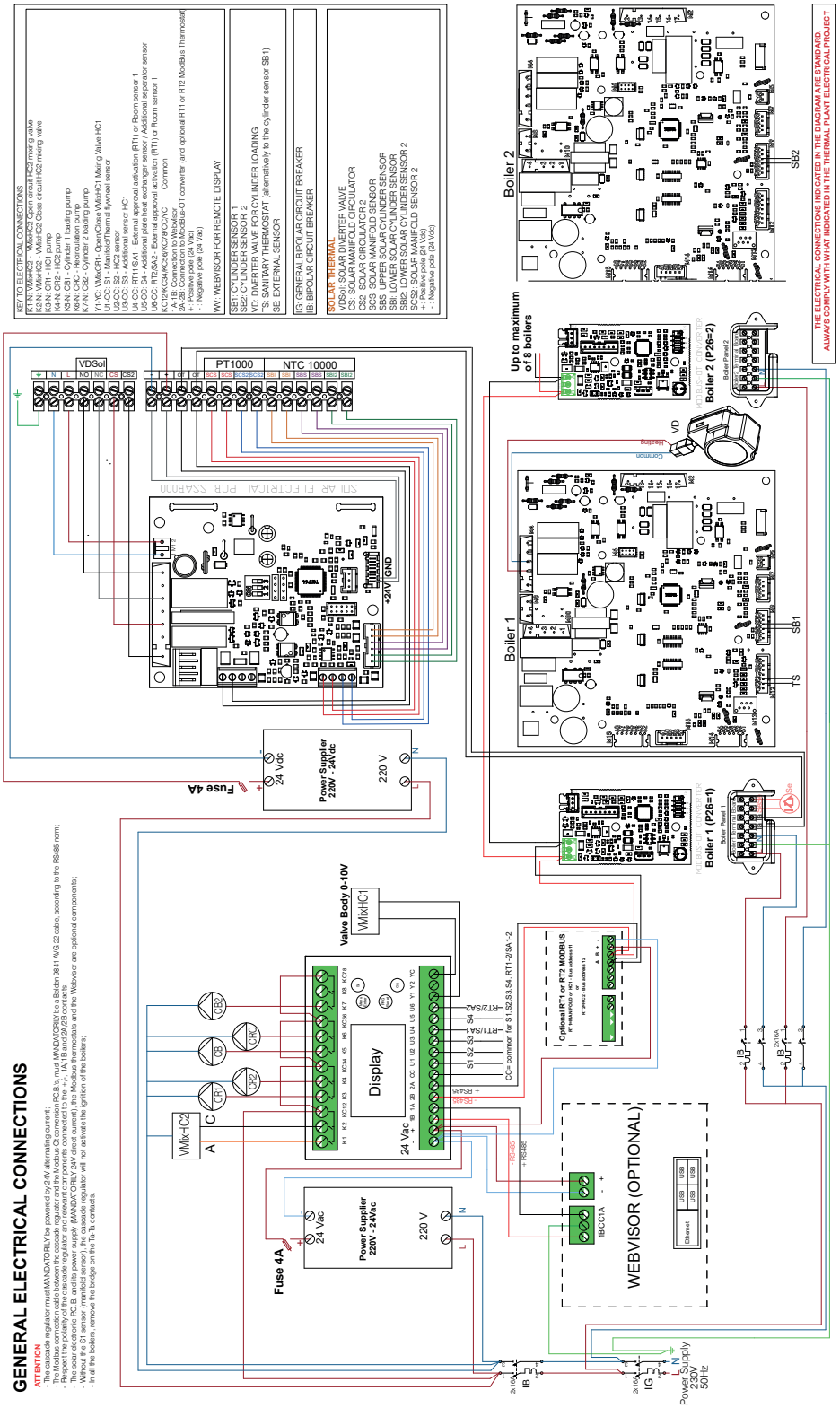

Aleabrax Systems

5-7 Katanning St

Bayswater WA 6105

AUSTRALIA